HOME WORKSHOP GUNS for Defense and Resistance

Volume IV

The 9mm Machine Pistol

Bill Holmes

PALADIN PRESS
BOULDER, COLORADO

Contents

1 Introduction

5 Chapter 1: Tools and Equipment

11 Chapter 2: Materials

13 Chapter 3: Receiver

21 Chapter 4: Bolt

31 Chapter 5: Barrel

37 Chapter 6: Trigger Assembly

57 Chapter 7: Grip and Barrel Shroud

65 Chapter 8: Sights

69 Chapter 9: Magazine Manufacture

77 Chapter 10: Assembly and Adjustment

81 Chapter 11: Heat Treatment

85 Chapter 12: Finishing and Bluing

Warning

At the time this book was written, federal law stated that any person legally eligible to own or possess a firearm could legally build or manufacture a firearm for his own use (as long as it wasn't a full-auto version), provided that the maker's name and address and a serial number were inscribed on the weapon. However, since then, Congress, at the instigation of President Clinton, has passed the so-called "Crime Bill." This bill, while doing little if anything to prevent "crime," contains a provision that prohibits any further manufacture of "assault weapons." This effectively bans manufacture of all versions of the firearm described in this book. Govern yourself accordingly.

With this in mind, this book is offered for *academic study only*. Neither the author, publisher, nor distributors of this book are responsible for any legal problems encountered by anyone who attempts to construct this firearm.

Introduction

The Holmes MP83A1 firearm described herein is the culmination of several designs. The first of which was created in 1976 and was the subject of my first book, *Home Workshop Guns for Defense and Resistance: Vol. 1, The Submachine Gun*, hereinafter referred to as *Vol. 1*.

Vol. 1 has been sold in most countries of the free world and smuggled into several Third World and communist countries. After 17 years in publication, it still sells as well as it did when first introduced.

In 1982 the Naval Weapons Procurement Center, acting for the joint military services, solicited proposals from interested parties for a new military submachine gun design. Of course, I thought I should submit one. So I built a prototype gun that fulfilled the stated requirements, mainly to make sure it would work the way I thought it would. Happily, it worked the way it was supposed to, so I submitted my proposal, which I called the MP82. Unhappily, mine was rejected in favor of the Heckler & Koch MP5.

While awaiting a decision by the government (it took the bureaucrats almost a year to make up their minds), I shot the prototype several hundred times, and, although it worked the way it was supposed to, I thought improvements could be made. I then built another gun incorporating the changes. This one was designated the MP83. Though it didn't actually function any better than the original, it was shorter and lighter in weight. It was also considerably more streamlined, making for a much improved appearance. Shortly after making these improvements I was notified that H&K had gotten the contract. The government didn't even look at my gun.

At this point, since most people who saw and fired the MP83 wanted one, I started building and marketing a semiautomatic model in several versions. Included were open-bolt; closed-bolt; locked-breech, closed-bolt in 9mm, 10mm, and .45ACP calibers; and long-barreled carbine versions complete with detachable butt stocks. I continued to build these firearms for more than six years, until the government suddenly decided that the guns were illegal and prohibited me from building them. The bureaucrats also stopped my

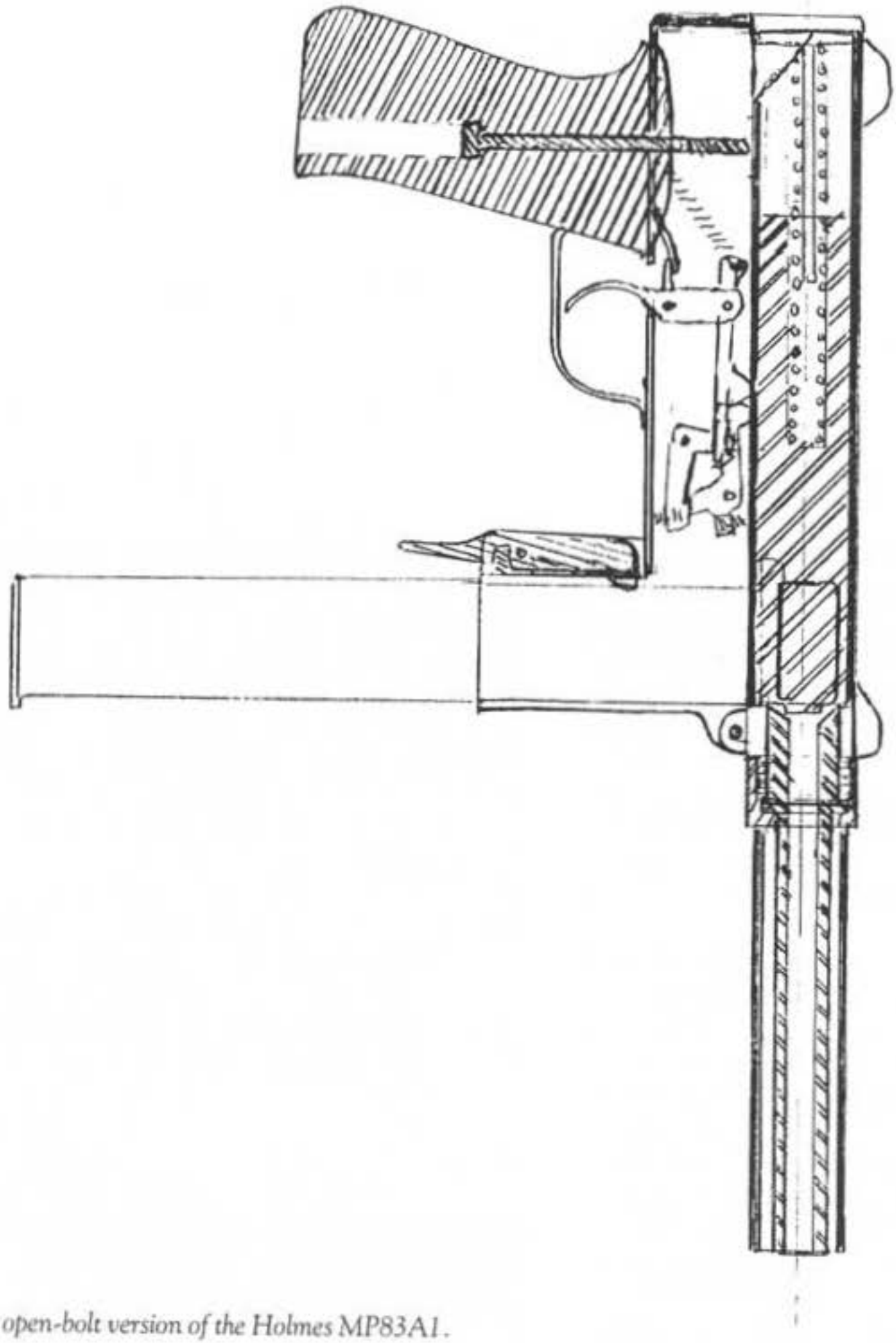

The open-bolt version of the Holmes MP83A1.

Left: The MP83A1 disassembled.

Below: The upper receiver tips up to allow bolt and trigger assembly removal.

Above: Removable trigger assembly of the MP83A1.

Right: Safety and magazine release are centrally located for easy access by either hand.

Left: Completed MP83A1 shown with interchangeable bolt and trigger assembly, which allows conversion to open-bolt operation.

Below: Gun with action open, with both trigger and bolt assemblies.

manufacture of a similar .22-caliber gun that I was building at the same time.

As might be expected, my interest in pistols of this type diminished considerably because of these developments, and I didn't build any for sale to the public. Some two years went by before I decided to build another gun, one which would be legal. This one would be a hammer-fired, closed-bolt gun. It would be longer and with a heavier bolt, making it easier to control. I built two guns and intended to market them, but continuous harassment by federal agents forced me to give up on even this. The end result is what you see in this book.

For a time, a small, lightweight, extremely fast firing gun with the magazine housed in the grip was thought to be ideal, and I embraced this philosophy. However, I eventually realized that a heavier gun with slightly more bulk and a slower rate of fire was far more controllable. Moving the grip as far to the rear as possible and using a separate magazine housing as a foregrip also enhanced controllability and stability, as well as accuracy.

The gun described in this book, then, is some 16 inches in overall length, using a 6-inch barrel. It weighs approximately 5 pounds The magazine housing is positioned several inches forward from the grip. It has a two-stage trigger, eliminating any switches or levers to contend with when changing the mode of fire. It has a rate of fire of approximately 600 rounds per minute (rpm) and very little muzzle climb or recoil.

As I have always tried to do with all my books, this book is in easy-to-follow, plain English that most readers should be able to understand. I am not trying to impress anyone by using big words or complicated sentences. Frankly, since my vocabulary is very limited, I couldn't even if I wanted to.

At the risk of being considered repetitious, let me remind you once more that the manufacture or possession of this gun is illegal and punishable by rather harsh penalties. Therefore, this book is offered for *academic study only*.

CHAPTER

1

Tools and Equipment

Proof that a firearm such as this can be built without the use of a milling machine can be found in the gun used in *Vol. I*. At the time it was built my home and shop had just burned to the ground, destroying everything my family owned. This left me without access to, or use of, any type of milling machine. All operations that would normally have been done with the mill I accomplished by using files, chisels, and a hand drill. Although I hope I never have to do such a thing again, it can be done as evidenced in *Vol. I*.

Since I have retired from active gun work and sold my shop, I only have the small milling machine shown in the accompanying photographs. Although it is somewhat clumsy and takes more time to perform certain operations than the full-sized "Bridgeport" types that I formerly owned, this little machine will do anything the others will. While I do not recommend them, even the oversized drill press types sold by most machine tool companies can be used, provided the table clamps are kept tight and slow, light cuts are taken. These are better than doing it by hand, but just barely.

Use of a lathe can hardly be avoided if any hope of concentricity is to be maintained. Though I am partial to lathes in the 15- to 16-inch swing range, the only one I have at present is a 12 x 36-inch machine. Since this lathe has a hole through the headstock of slightly more than 1 1/2 inches in diameter, it serves its purpose adequately. The geared-head version, as shown, costs several hundred dollars more than a similar belt-driven model offered by the same company, but such features as a cam-lock spindle make it well worth the difference. Although the electrical systems on these Chinese-made machines are usually somewhat cruddy, the machines themselves are sound and represent good values for the money.

A small, high-speed grinder such as the Dremel tool can be used to perform many of the operations usually done with the milling machine. Receiver openings are easily cut and finished by using one of these tools, provided that the corners or ends are formed using suitable drills. With the aid of a hand drill and a few files and chisels, all required mill work can be accomplished by this method.

Above and Right: The 12 x 36-inch geared-head lathe pictured has a 1 1/2-inch hole through the spindle, making it ideal for most gun work. It costs about $3,000. Although these Chinese-made machines usually have inferior electrical systems, they are mechanically sound.

Below: A milling machine, regardless of type or size, is almost indispensable for operations required here.

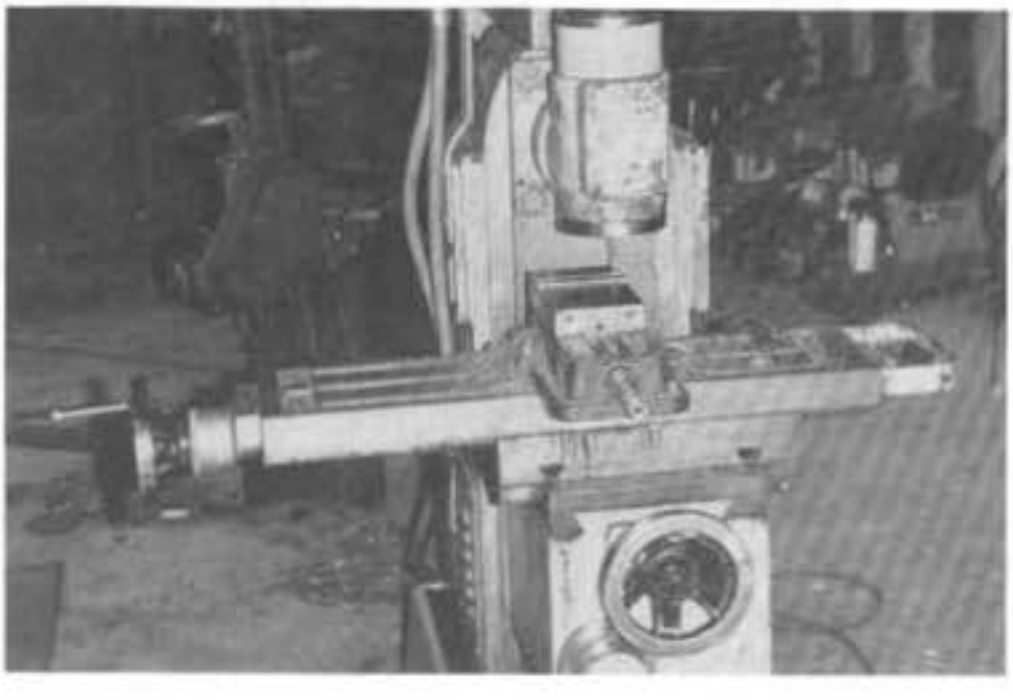

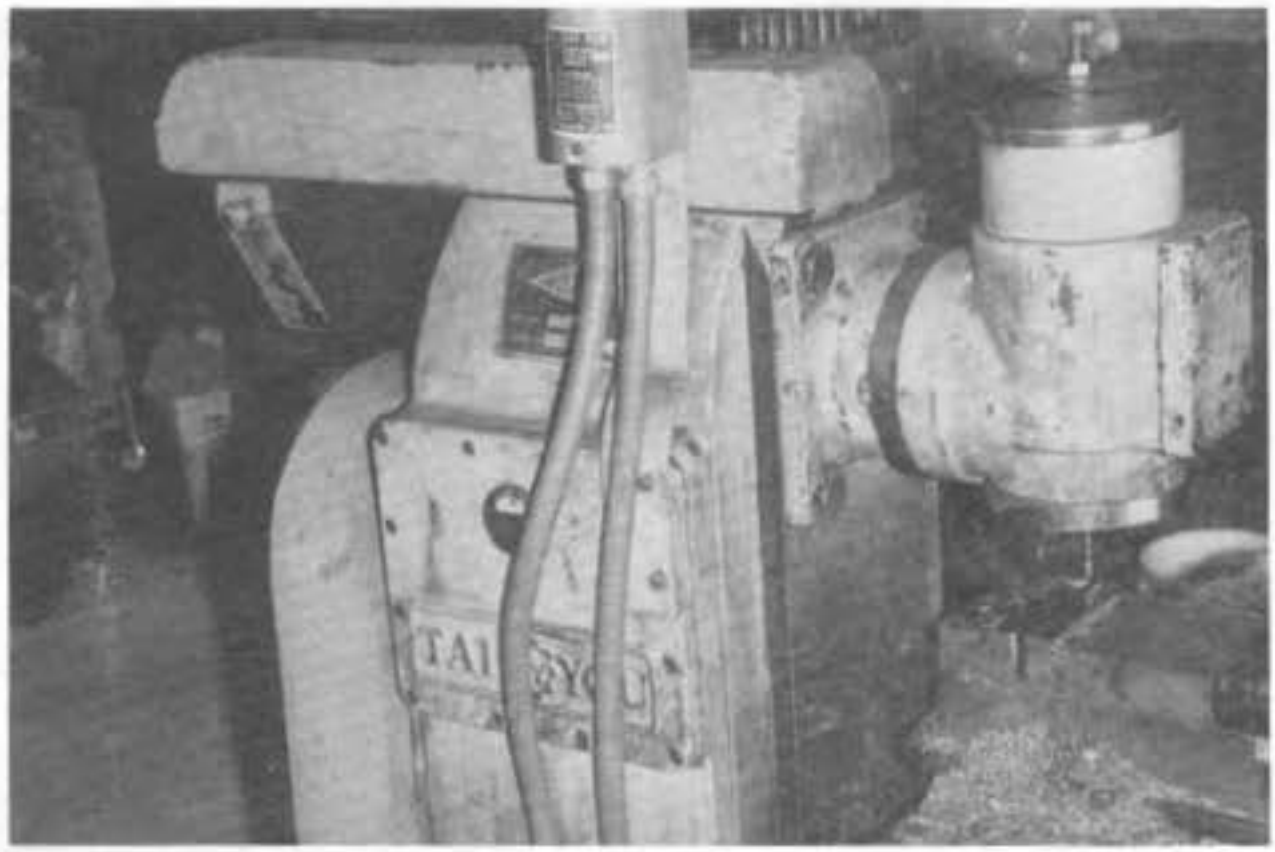

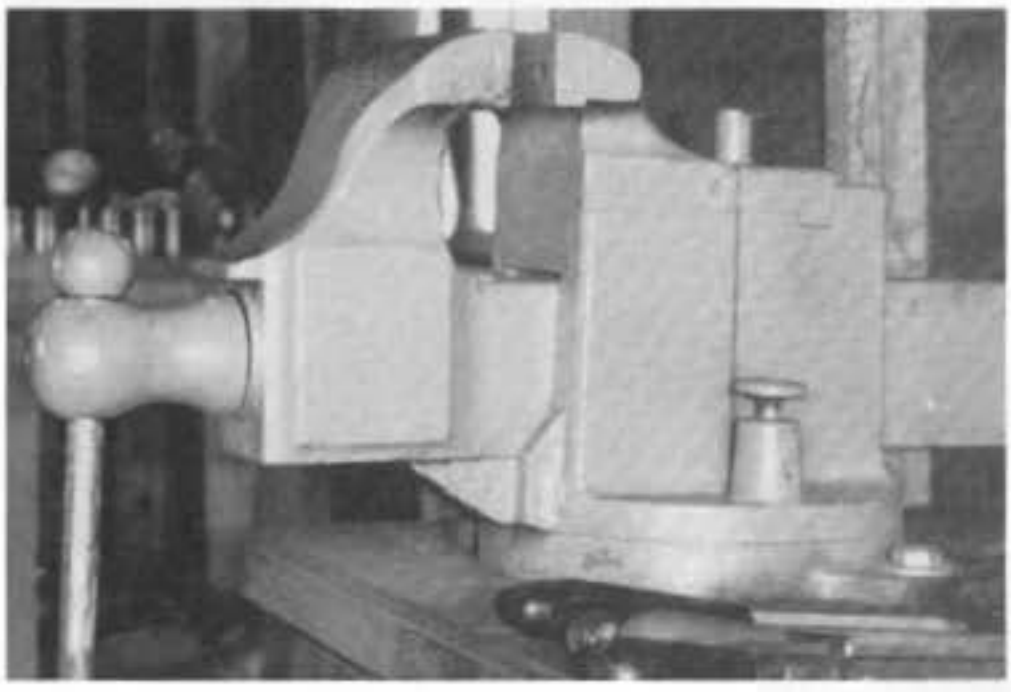

Above: This little mill is a combination vertical and horizontal mill. The universal table makes it even more desirable.

Left: A heavy vise, as shown, can substitute for a press or a sheet metal brake, and has many other uses.

Below: A sanding disc mounted on a large motor is useful to form parts.

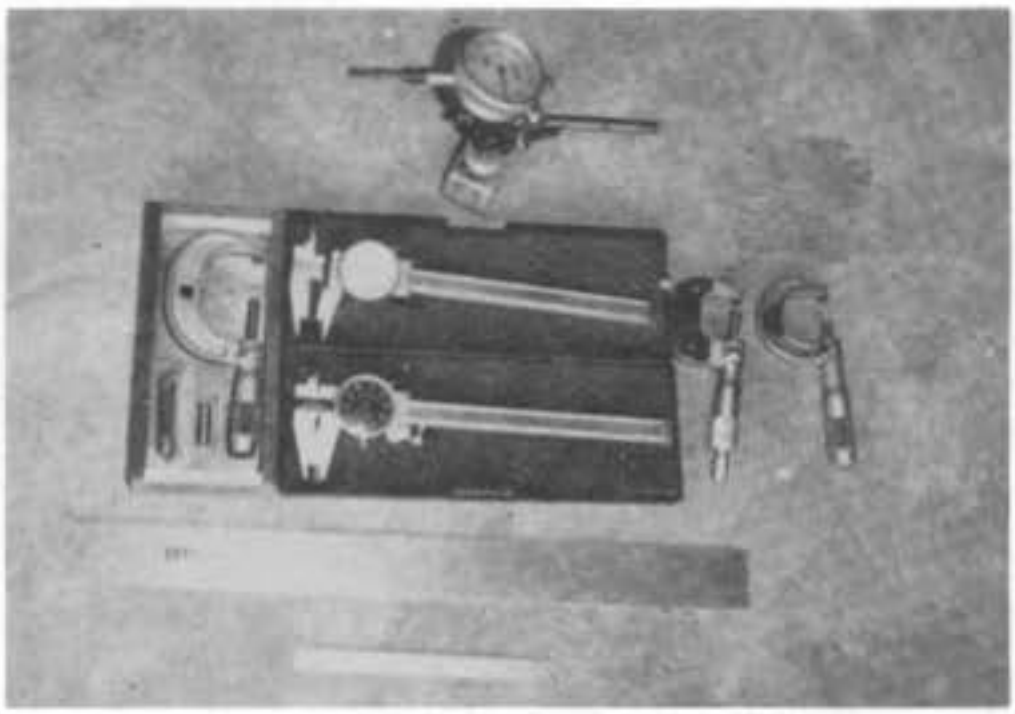

Above: Measuring tools include micrometers, vernier calipers, scales, and dial indicator. However, a single vernier caliper will suffice.

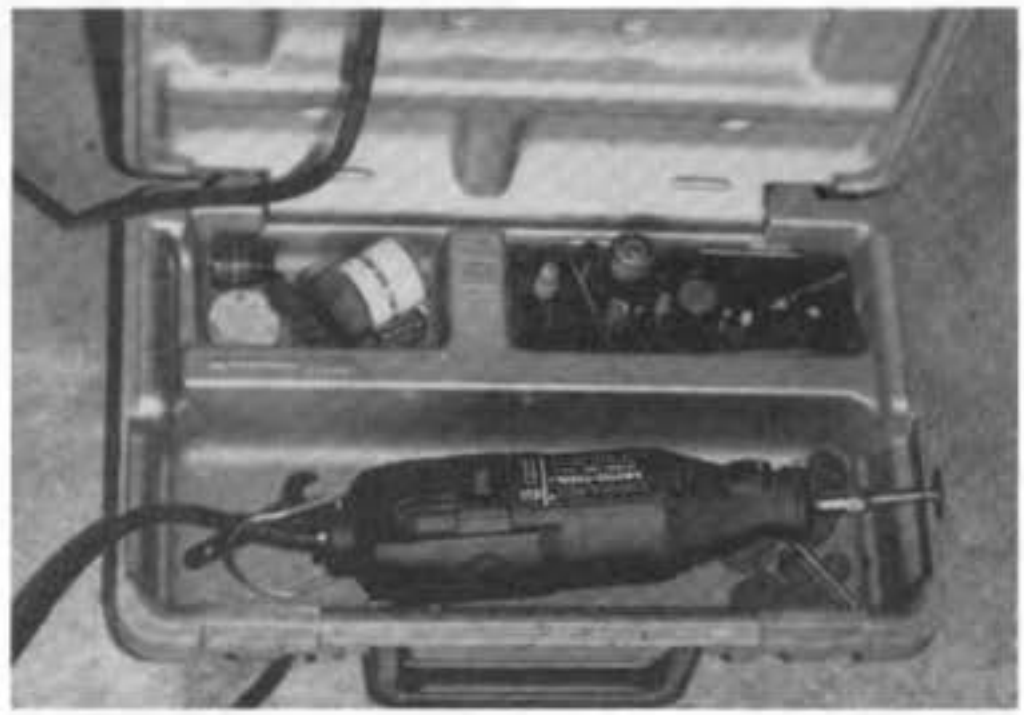

Right: The small high-speed hand grinder can perform many of the operations that usually require the use of a milling machine. It just takes longer.

Below: An oxygen-propane combination is handy for brazing and heat-treating operations.

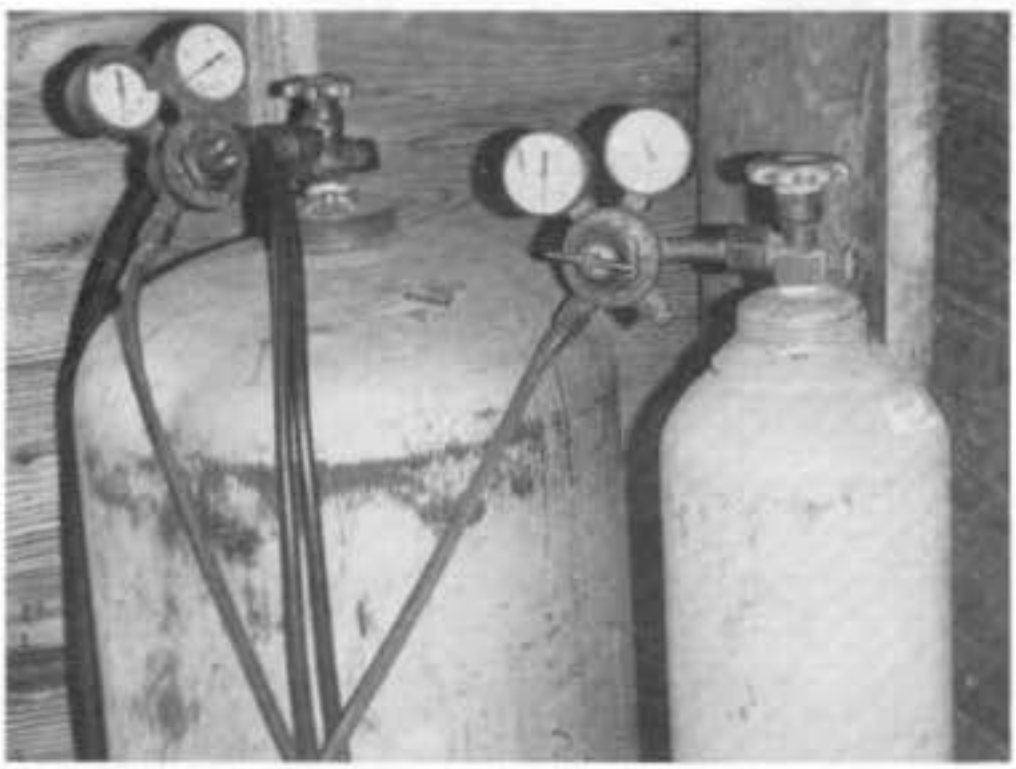

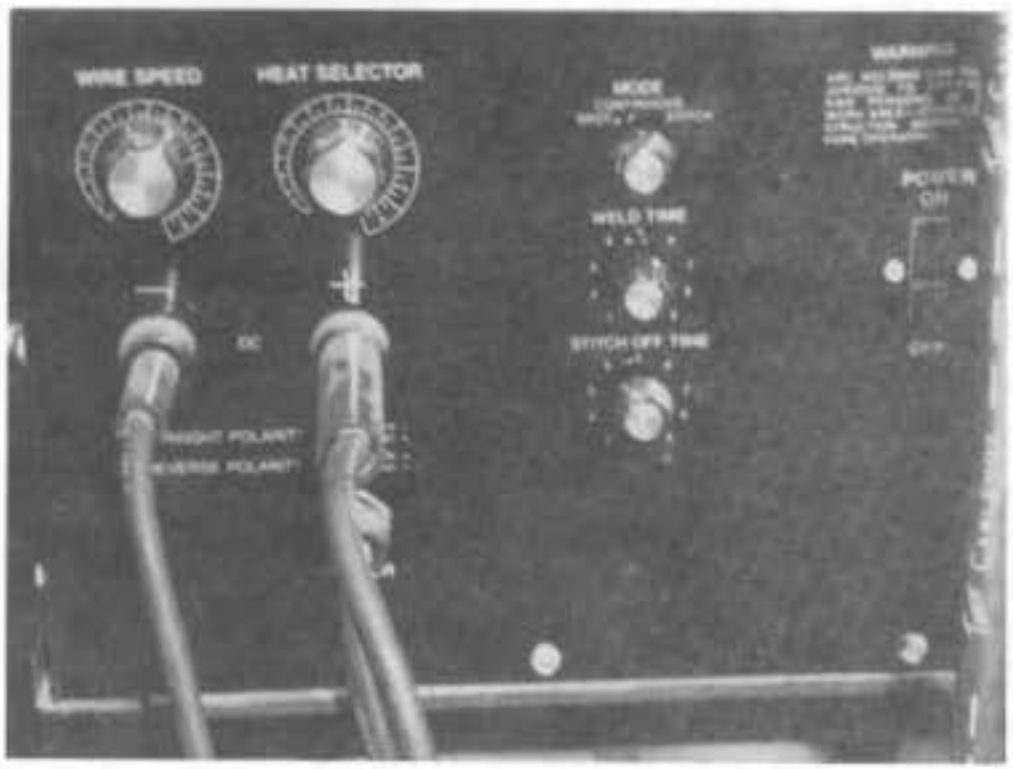

Left: This welding machine is capable of MIG, TIG, and stick welding.

Below: A small metal cutting band saw such as this can save a lot of manual labor.

A good, sturdy vise, the larger the better, is not only useful to secure parts while working on them but can be used as a press or a sheet-metal brake to form the sheet-metal parts used in the lower receiver and trigger housings. The small cast-iron vises sold by discount houses won't last long under such usage. What is required is a good heavy-duty model with at least 6-inch jaws. The discount-house jobs will break, or the screw will strip, when very much pressure is exerted between the jaws. Either way, the vise is rendered useless. The one depicted in this chapter was already several years old when my father bought it in a secondhand store more than 50 years ago. Even though it has been through a fire and used as an anvil on occasion, it still works better than a new one would.

Some measuring equipment is also required. At the very least, you'll need a 6-inch vernier caliper, and preferably, you should have access to micrometers up to 2 inches, a depth mike, and a 12-inch scale or ruler. A dial indicator also comes in handy, especially for use in stopping inside lathe cuts at a precise point.

One of the small metal cutting band saws will save a lot of wear and tear on your arm muscles, as required when using a hand hacksaw. This tool usually sells for around $200 and does its job fairly well as long as light cuts are taken and a sharp blade is in place. As soon as the blade begins to dull, it starts jumping off the drive wheels. Blades made from so called "bimetal" will last far longer than the ones that come with the saw. With the saw in the vertical position and a sharp blade in place, small parts such as hammers, triggers, and sears can be cut to rough shape and finished by milling, filing, or sanding.

The use of welding equipment is also a necessity. Preferably, it should be of the "heli-arc" or TIG type. Lacking this, a wire feed (MIG) or stick welder can be used. The welding machine shown in the photo is capable of all three. Some type of gas welding equipment should also be available. In my case, I use a combination propane and oxygen setup. Acetylene can be used instead of propane if desired, but I only use it for brazing and silver soldering, hardening small parts, and imparting case colors as a finish. Because the propane combination actually has a hotter flame than acetylene and is far more economical to buy, it is ideal for my purposes. Acetylene must be used if actual welding is attempted. The propane combination, at welding temperatures, will actually cook the carbon out of the steel, ruining it. The acetylene setup will not disturb the carbon content and can actually impart more carbon if desired by using an acetylene-rich, or "carburizing," flame. However, this actually has little to do with our usage here because an electric welding process should be used whenever possible.

The items described above, together with a normal assortment of hand tools and a few taps and drills, will allow a competent operator to turn out a finished firearm in short order. *Vol. I* goes into considerable detail about making parts with a minimum of equipment. I suggest you obtain a copy if you don't already have it.

A list of the bare minimum of necessary tools includes the following:

- 1/4- or 3/8-inch drill motor or hand-type drill
- Drill bits, sizes 1/8, 3/16, 1/4, and 3/8 inch
- A hacksaw with several blades
- 10-inch mill bastard file
- 3-cornered (triangular) files
- Round files, 1/8, 3/16, or 1/4 inch (preferably all)
- Small square files
- Cold chisels, 1/8, 1/4, and 1/2 inch in width
- Center punch
- Scriber
- 12-inch ruler
- Protractor
- Micrometers or vernier caliper
- Appropriate taps with corresponding drills
- Tap wrench
- Plus the use of a lathe, welding equipment, and grinder

CHAPTER

2

Materials

Locating sources for materials was covered rather thoroughly in several of my other books. But since not everyone may have these books available, we will take a short trip through it one more time. Of course, the easiest method of obtaining these is to buy new materials from an appropriate supplier. When this is not possible, alternate sources must be found.

The body, or receiver, of this gun is made from 1 1/4-inch outside diameter (OD) seamless tubing that has a wall thickness of .065 inch. An overall length of 9 1/2 inches is required. If commercial tubing is available, buy what is called 4130, also known as chrome-moly aircraft tubing. At present, this is available all over the free world. If the time should come when it is no longer available, high-pressure pipe or boiler tubing can be used. Drive shafts from some of the older, rear-wheel-drive foreign cars are also close to the proper size. Certain motorcycle front forks can also furnish material for this, as well as shock-absorber bodies. If nothing else is available and it is absolutely necessary, I would not hesitate to use water or gas pipe—but only as a last resort and by doubling the wall thickness.

A barrel blank, 6 inches long and 1 inch in diameter, will be needed. This can be obtained at present by buying a blank from any of several manufacturers (one 24-inch barrel blank will provide material for four 6-inch barrels). If these are no longer available, one way to obtain a usable barrel is to obtain a discarded military barrel of .30 caliber, or similar caliber, and ream the bore to size. Then you can cut new rifling as described in the chapter on barrel manufacture in *Vol. I*. Failing this, you will be required to drill, ream, and rifle a length of quality steel bar stock. One should be selective in choosing material for this. It should be good steel. An iron bolt or shaft of low-carbon steel will not last long enough in use to make it worthwhile. Automobile axles and, in some cases, steering shafts are a good source. Car and truck transmissions contain shafts made from suitable material for this.

Another section of better-quality steel, 1 1/8 inches in diameter and 6 inches long, is required to make the bolt, or breechblock. This should be a

tough, shock-resistant material such as 4140 or similar. Here again, various truck or tractor axles are sources, as are shafts from various farm implements.

In many instances, these substitute materials will be too hard to machine or work. This does not present a serious problem if firewood is available. Simply build up a good-sized wood fire and place the material to be softened (annealed) in the middle. After the fire burns down, the material will be surrounded by hot coals and ashes and should be allowed to cool slowly, preferably overnight. It should then be soft enough to machine freely.

A plate of 14-gauge sheet metal, 20 inches long and 4 inches wide, is required for the frame and magazine housing. Normally, you would get this from a sheet-metal shop. If such shops no longer exist, it can be cut from a junk car frame.

Strips of steel in 1/4-, 3/8-, and 1/2-inch thickness will be required to fabricate the trigger, hammer, sear, and magazine latch. A drill rod, stems from broken drills or taps, or—if nothing better is available—nails can be used for the various pins. And if suitable coil springs are not available, they can be wound from music wire.

Valves from gasoline and diesel engines are a source of high-quality round stock. Farm implement, car, and truck springs and frame material yield flat stock of sufficient thickness for triggers, sears, and other parts. In many cases, these will also require annealing in the wood fire before they can be worked.

There are numerous sources for coil springs of the type needed. Most hardware stores and automotive supply houses keep a stock of various sizes on hand. Many electrical switches, fuel pumps, and carburetors contain such springs, as do clocks, locks, radio, and television sets and various kitchen appliances, even mousetraps.

If you search diligently, something will turn up that can be adapted or rebuilt into the part you need. A visit to an automotive salvage yard will usually turn up all the materials you need.

Wood for the grip can be found at lumber yards, cabinet shops, or as scraps from custom gun stock makers.

I suggest that you carefully study the chapters on heat treatment in both this book and *Vol. I* before you begin gathering your material.

CHAPTER

3

Receiver

The receiver, or body, of the gun should be built first because all other parts and components are attached to it or fit inside it.

Cut to length (9 1/2 inches) and square both ends of the 1 1/4-inch OD seamless tubing. Determine which end the barrel will fit into; this will be hereafter referred to as the forward end. Three-eighths inch back from the front face, locate and drill four 1/4-inch holes that are spaced at intervals of 90 degrees around the diameter.

Slip a bushing, 1 1/8 inches long, snugly into the front receiver body to a depth of 5/8 inch. This leaves 1/2 inch exposed. Weld shut the four holes previously drilled, securing the bushing in place. The welds are preferably done with a TIG welder, sometimes referred to as "heli-arc." These should be built up above the receiver's surface and dressed back flush with the surface of the metal. Properly done, these welds will be undetectable when the gun is finished.

Now bore or ream the bushing to an inside diameter (ID) of .875, to accept the barrel shank. Turn the exposed 1/2-inch portion to a diameter of 1 1/16 inches (1.065) and thread it 24 threads per inch.

Locate a centerline along the top of the receiver, with another centerline on the exact bottom side, 180 degrees apart. Lay out still another line on the right side 45 degrees below the top line, or in a nine o'clock position when viewed from the rear. These lines can be located and marked easily by mounting a cutting tool with a sharp conical point ground on it in the lathe tool post, exactly on the centerline. The point is drawn up against the work and drawn lengthwise along it, with the lathe carriage being cranked by hand. After the line is marked, rotate the work 180 degrees and repeat the procedure. Then do it once more for the third line. This will result in very straight and accurate lines, especially if the headstock is locked, or fixed, in place while the carriage is moved along the work.

The extreme front ends of both the ejection port and the magazine opening will be 1 1/4 inches rearward from the front face of the receiver (since the barrel bushing is now welded in place,

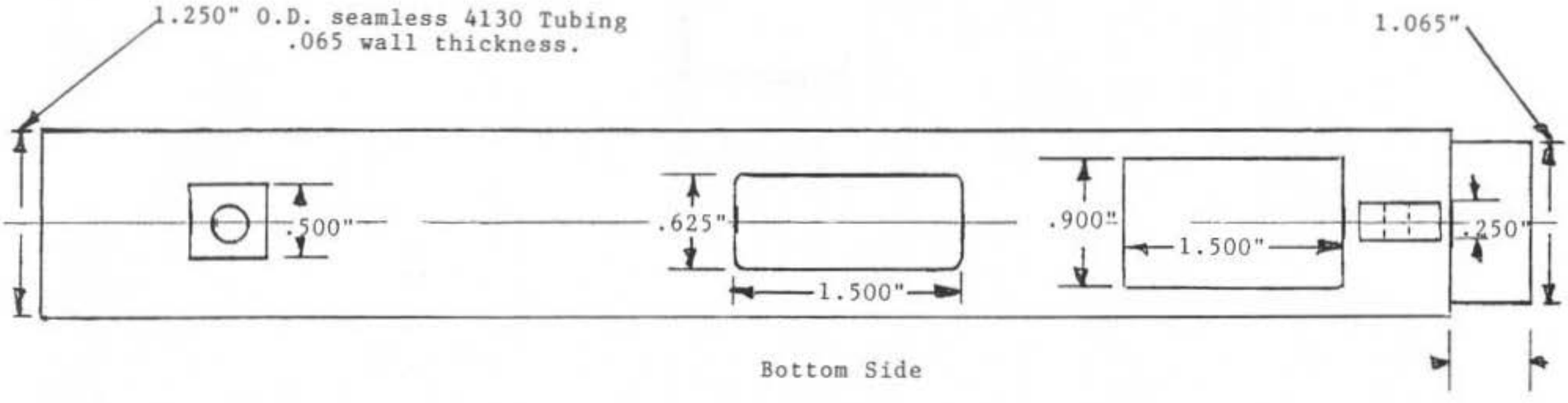

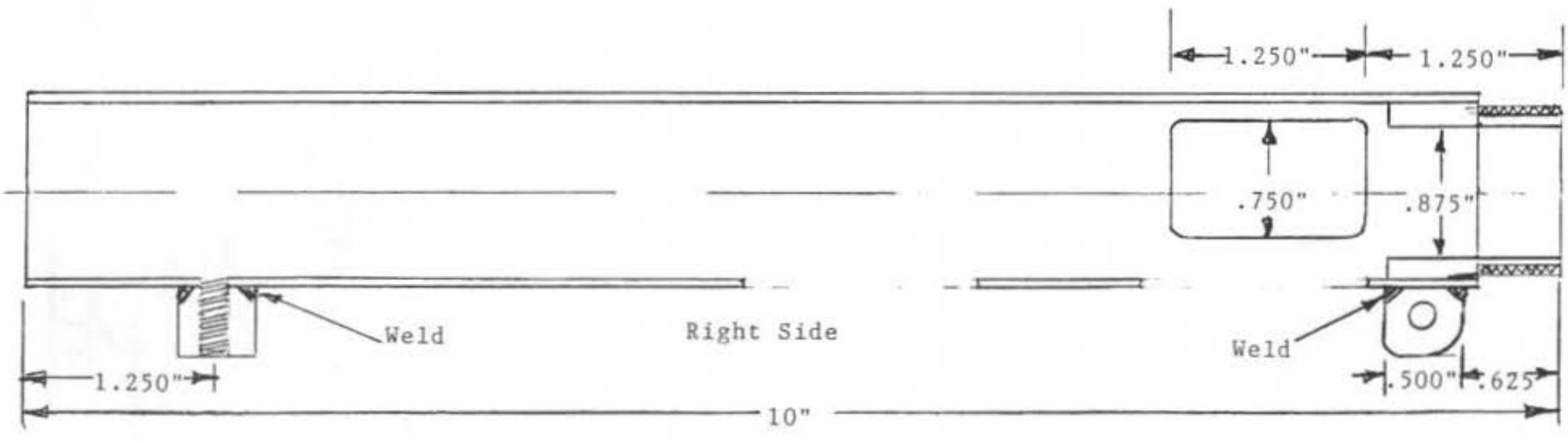

Upper receiver.

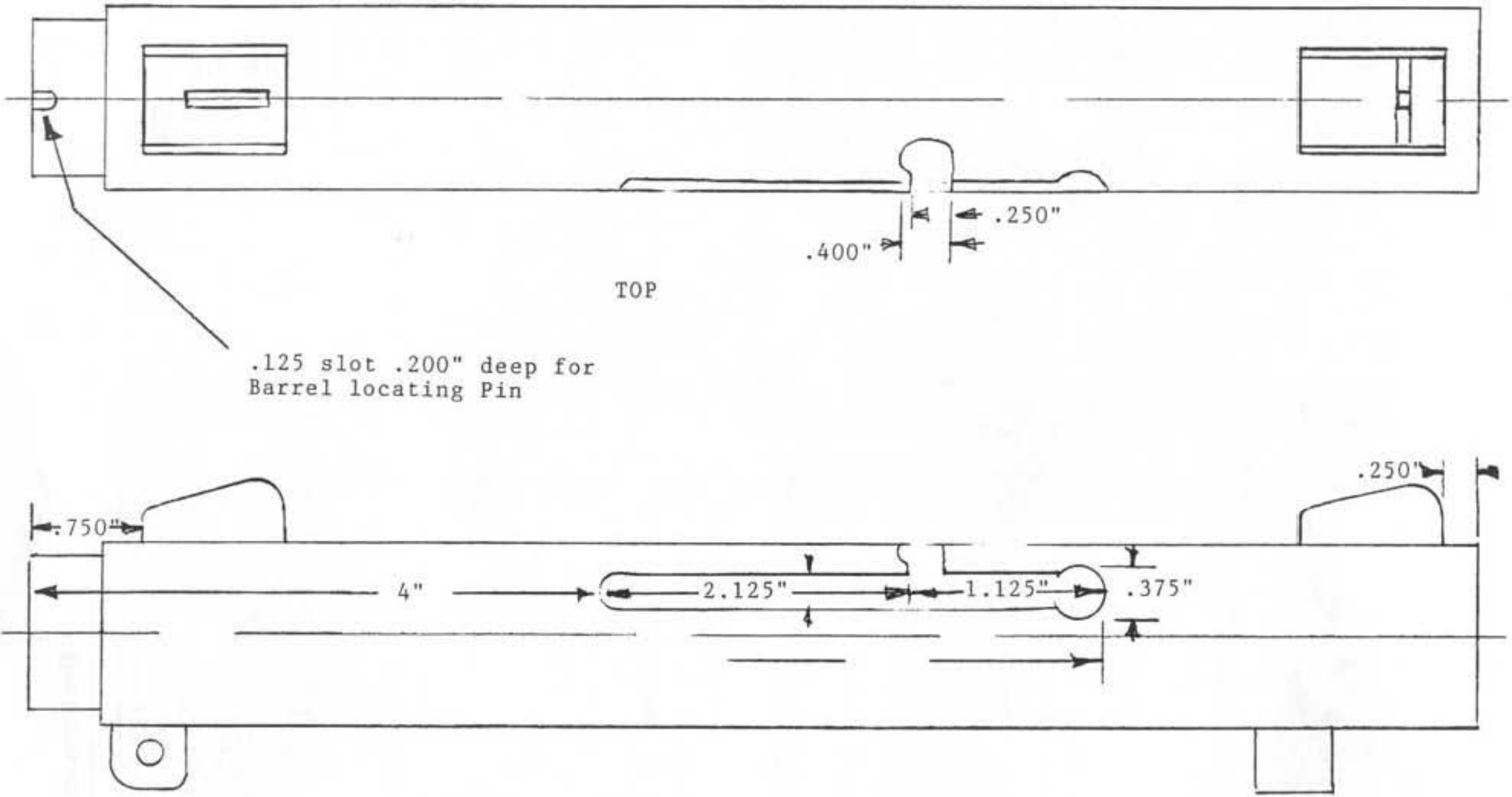

Upper receiver, right side.

its front face will now be considered the front face of the receiver). From this point, on the right side measure to the rear another 1 1/4 inches. This is the rear edge of the ejection port. Then, 3/8 inch to the right of the top centerline, scribe a longitudinal line between these two vertical lines. Next, scribe another 3/4 inch below this line. This forms an outline of the ejection port.

Lay out another opening beginning 1 1/4 inches behind the receiver face and centered over the bottom centerline. If a Sten magazine is used, this opening should be 1 1/2 inches long and 7/8 inch wide (7/161, on each side of the centerline). The corners of this opening should be cut square, without any radius. Material inside these outlines can now be removed, with the milling machine, the hand grinder, or the interconnecting holes method described in *Vol. 1*.

Lay out the cocking-lever slot and cut in the same fashion. Form the slot, 1/4 inch wide by 3 inches long, and enlarge it to 3/8 inch in diameter at the extreme rear to permit installation or removal of the cocking lever.

Cut an opening to clear the hammer and disconnector in the same fashion along the bottom centerline and to the dimensions shown in the drawings.

Cut two small blocks from some type of steel that will not air harden when it is welded. You can use 1018, 4140, or similar for this The block used to form the front hinge bracket is cut 1/2 by 1/2 by 1/4 inch. Weld this to the receiver on the bottom centerline and just behind the threaded portion. The other block, which is welded in place at the lower rear of the receiver as shown in the drawing, is cut 1/2 by 1/2 by 1/2 inch. The edges of these blocks that join the receiver should be beveled to allow proper "filling" with welding wire or rod. The welds should be filed, or milled, back square and flat. This is probably unnecessary, but it looks better, so take a few minutes and do it, even if it doesn't show.

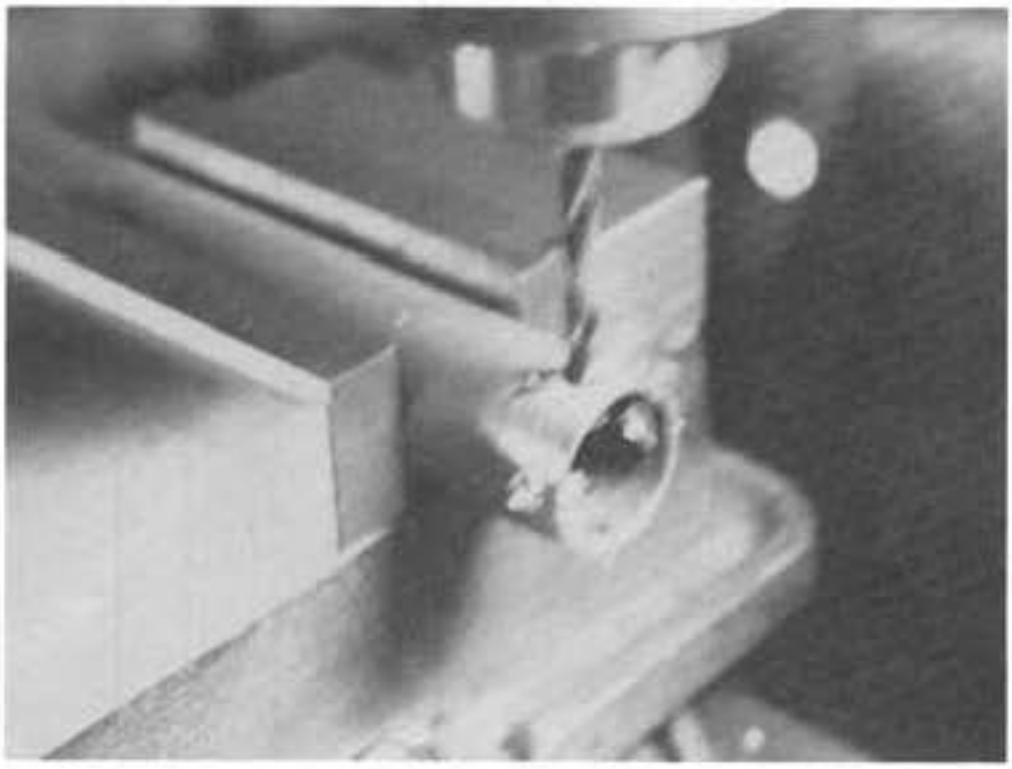

Left: Drill the upper receiver to allow for welding the barrel bushing in place.

Below: Barrel bushing, ready to be installed and welded.

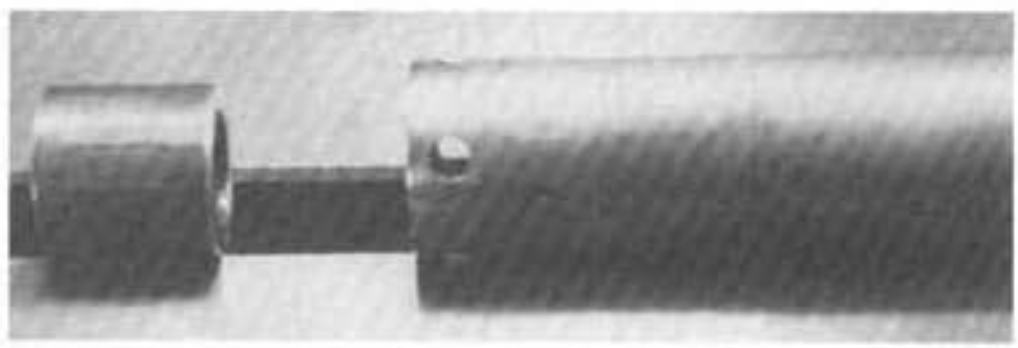

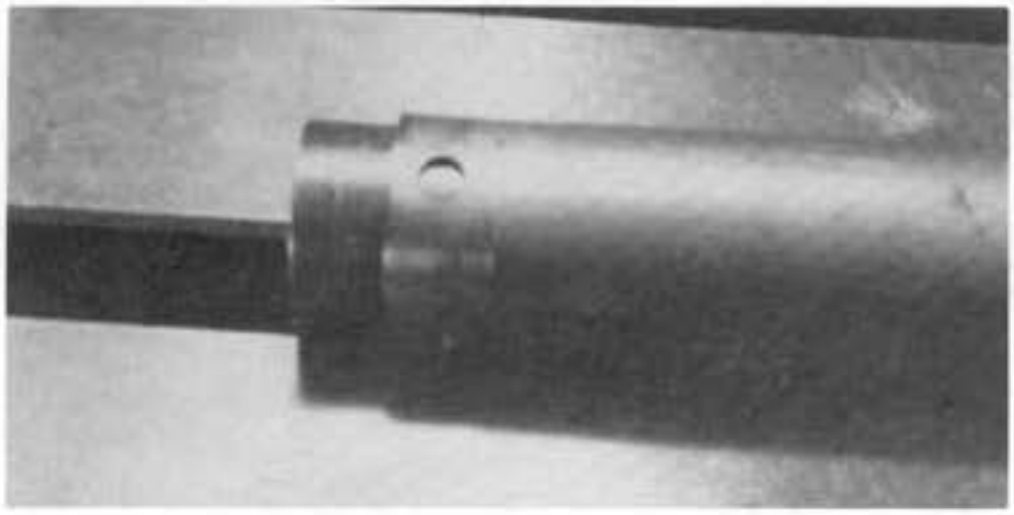

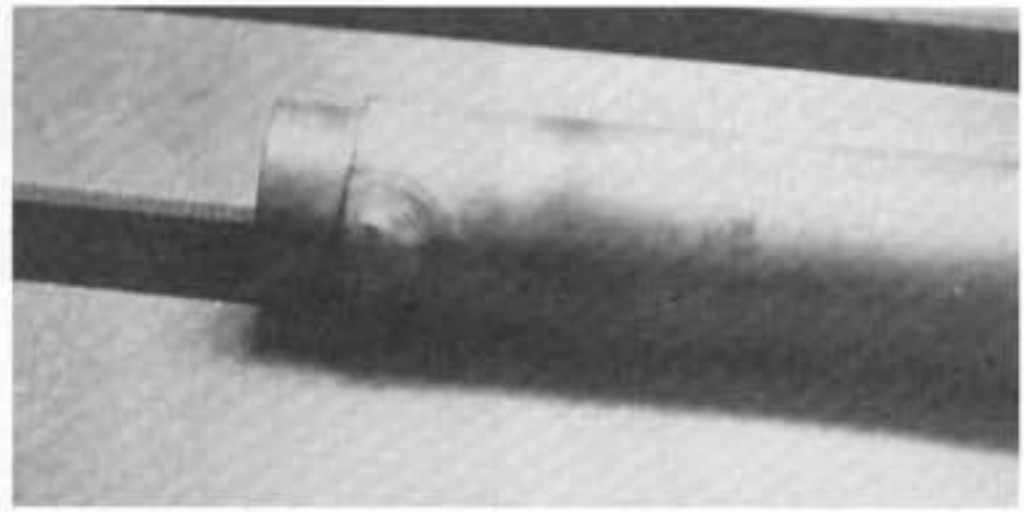

Above: Welding is accomplished by filling holes in the receiver.

Right: Welded in place.

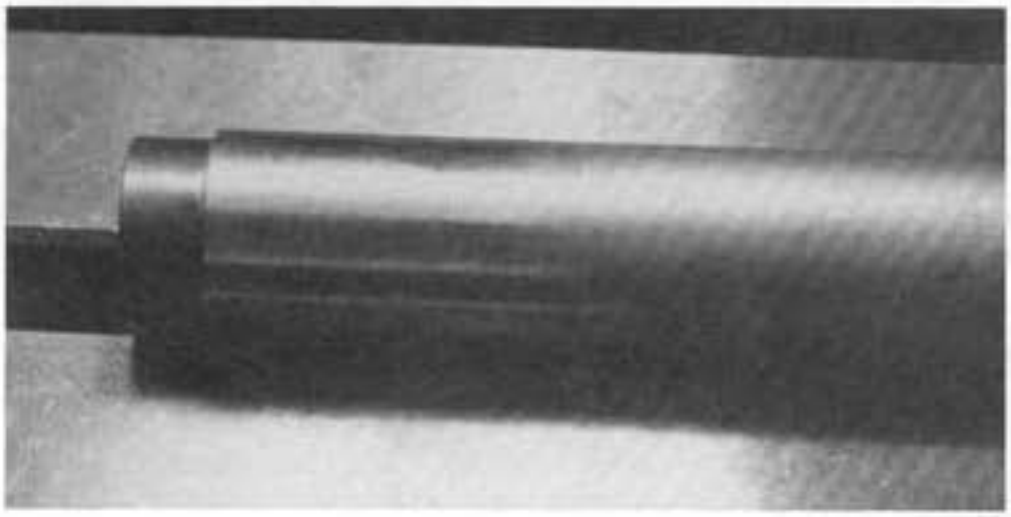

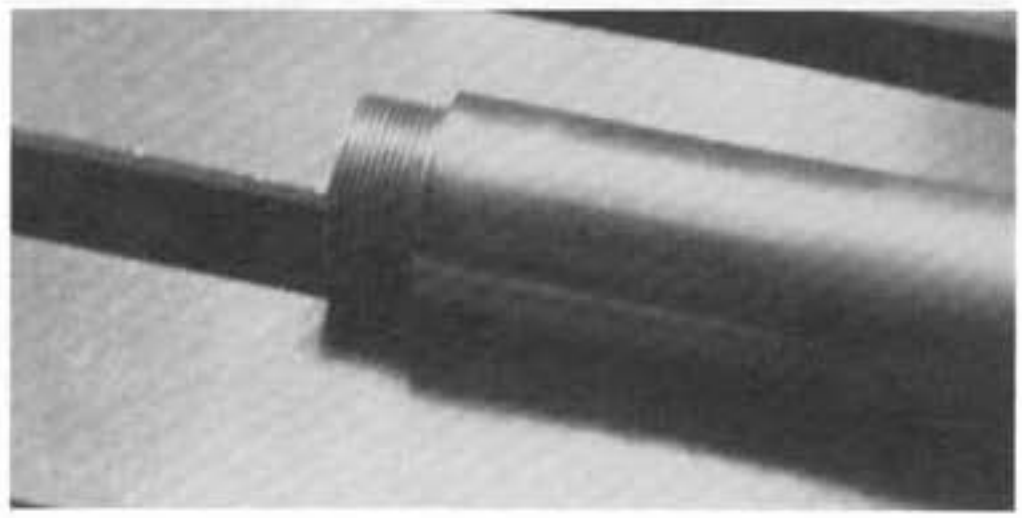

Above: Dress the welds flush with surface. They are undetectable if properly done.

Right: Thread the barrel bushing to mate with barrel retaining nut.

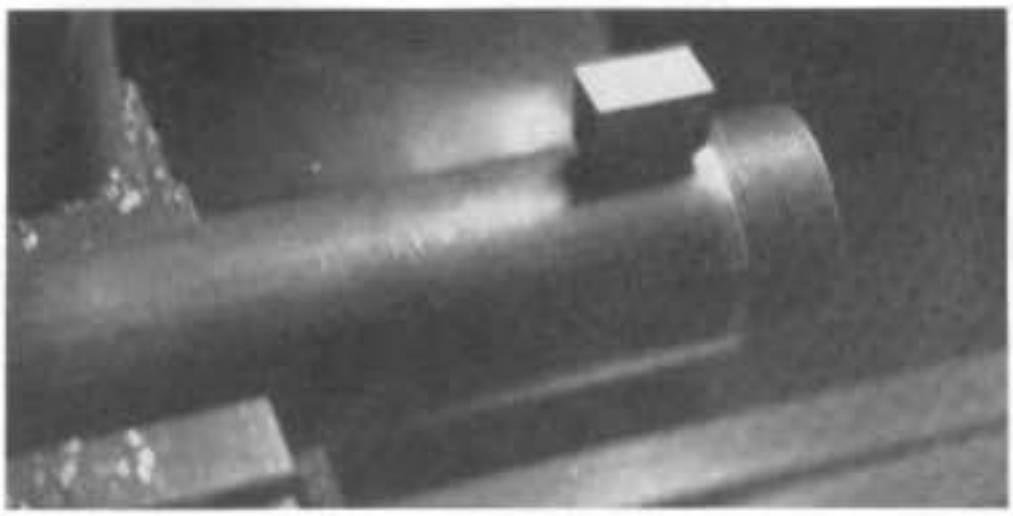

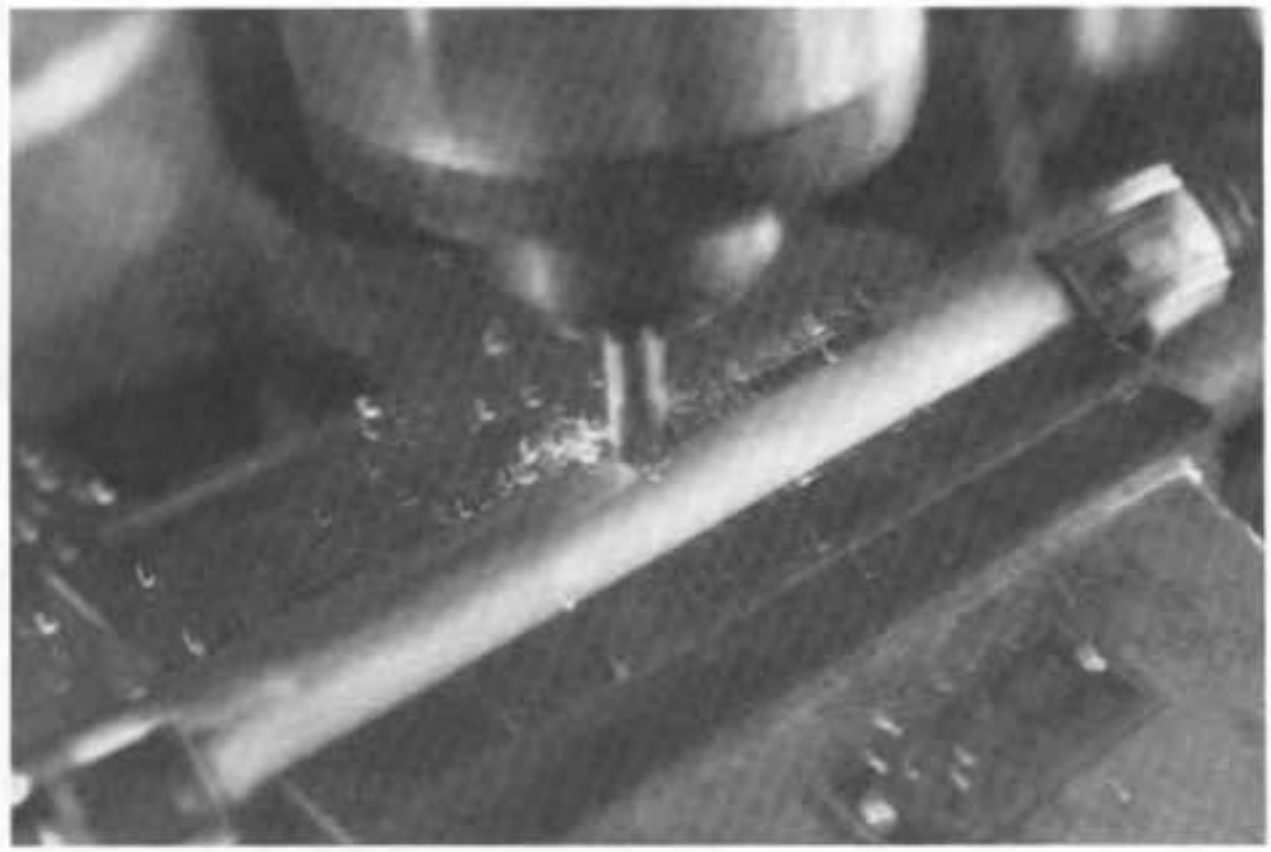

Above: Weld the block to the lower side to form the hinge hanger. Weld a similar block at rear to accept the grip bolt.

Right: Openings in receiver are easily cut with milling machine.

Below: It will take a little longer, but the same result can be accomplished using a hand grinder.

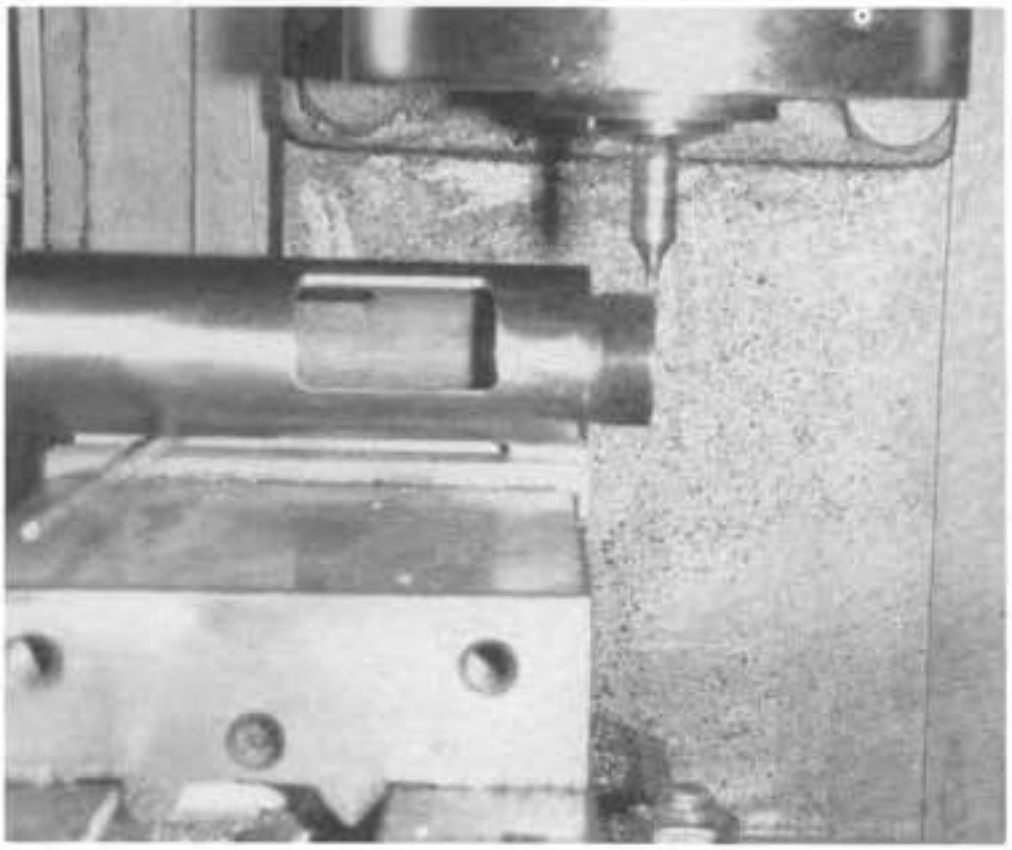

Left: Cut a slot to accept the barrel locating pin in the receiver using 1/8-inch end mill.

Below: Drill a hole for barrel locating pin through the slot, assuring alignment.

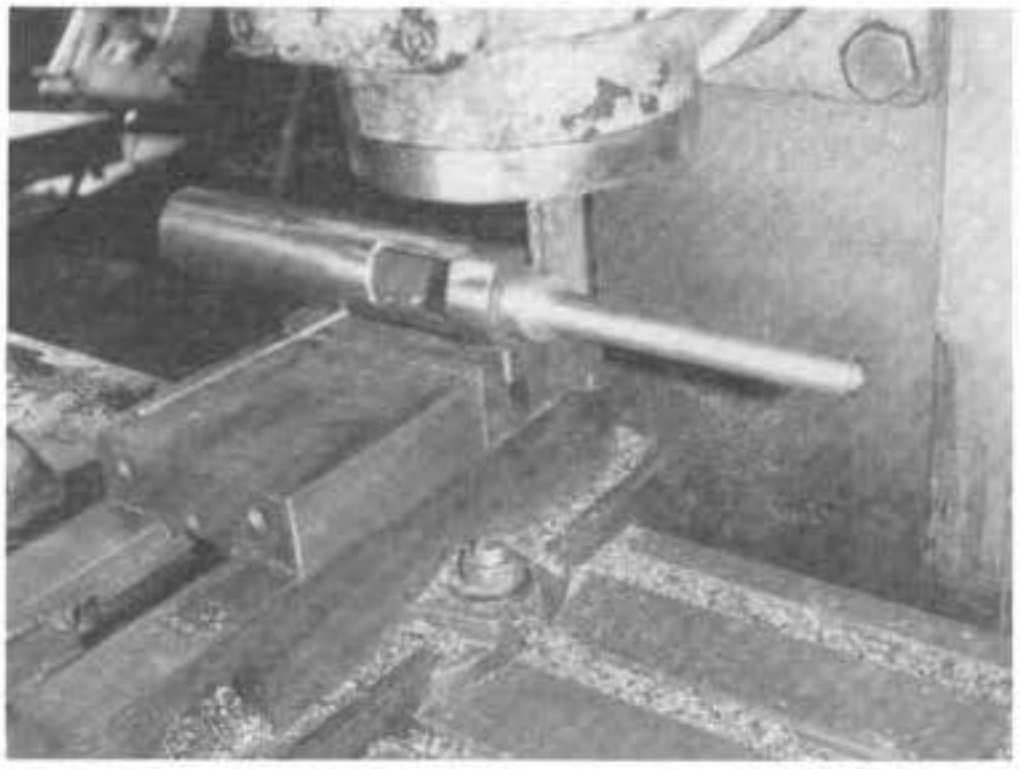

CHAPTER

Bolt

The bolt, or breechblock as some insist on calling it, is made from 1 1/8-inch-diameter round stock, 6 inches long. To prevent battering and undue wear, it should be made from material that can be hardened. If commercial steel is available, buy a type that you (or someone with the facilities) can harden to between 35 and 40 on the Rockwell "C" scale. If none is available, automobile axle material will serve admirably. It will almost always require annealing, as described in Chapter 2, because most of these have an extremely hard exterior surrounding a softer inner core.

Although this book is supposed to describe how to build a submachine gun, I will show two different bolt and trigger assemblies. One will deal with an open-bolt, full-automatic design; the other is a closed-bolt, hammer-fired weapon. The latter is harder to make into a full-automatic weapon.

Whichever configuration you desire, they are made in the same manner and can actually be converted by switching the bolt and trigger assemblies. Be warned again. Don't let the feds catch you with the open bolt and corresponding trigger assembly, even if you don't have the rest of the gun.

At any rate, chuck a suitable piece of material in the lathe with the ends squared and true. Turn the forward end, forming a square shouldered projection .200 inch long by .600 inch in diameter. This forms the bolt nose, which is bored to a depth of .100 inch with an ID of .400 inch. In the center of this, form a fixed firing pin .060 inch to .065 inch in diameter and projecting .050 inch above the bolt face. This should have a rounded, hemispherical tip, which is formed by using a cutting tool ground for this purpose. This is used in the open-bolt gun. The closed bolt is made in the same manner and to the same dimensions, except that where the fixed firing pin was formed for the open bolt, a hole is drilled instead, using an .065-inch drill. This hole should be started with a number one center drill, which is only used to establish the center, followed by the drill. The hole should be drilled deep enough (at least 1/2 inch) to meet a larger .156-inch hole, which is

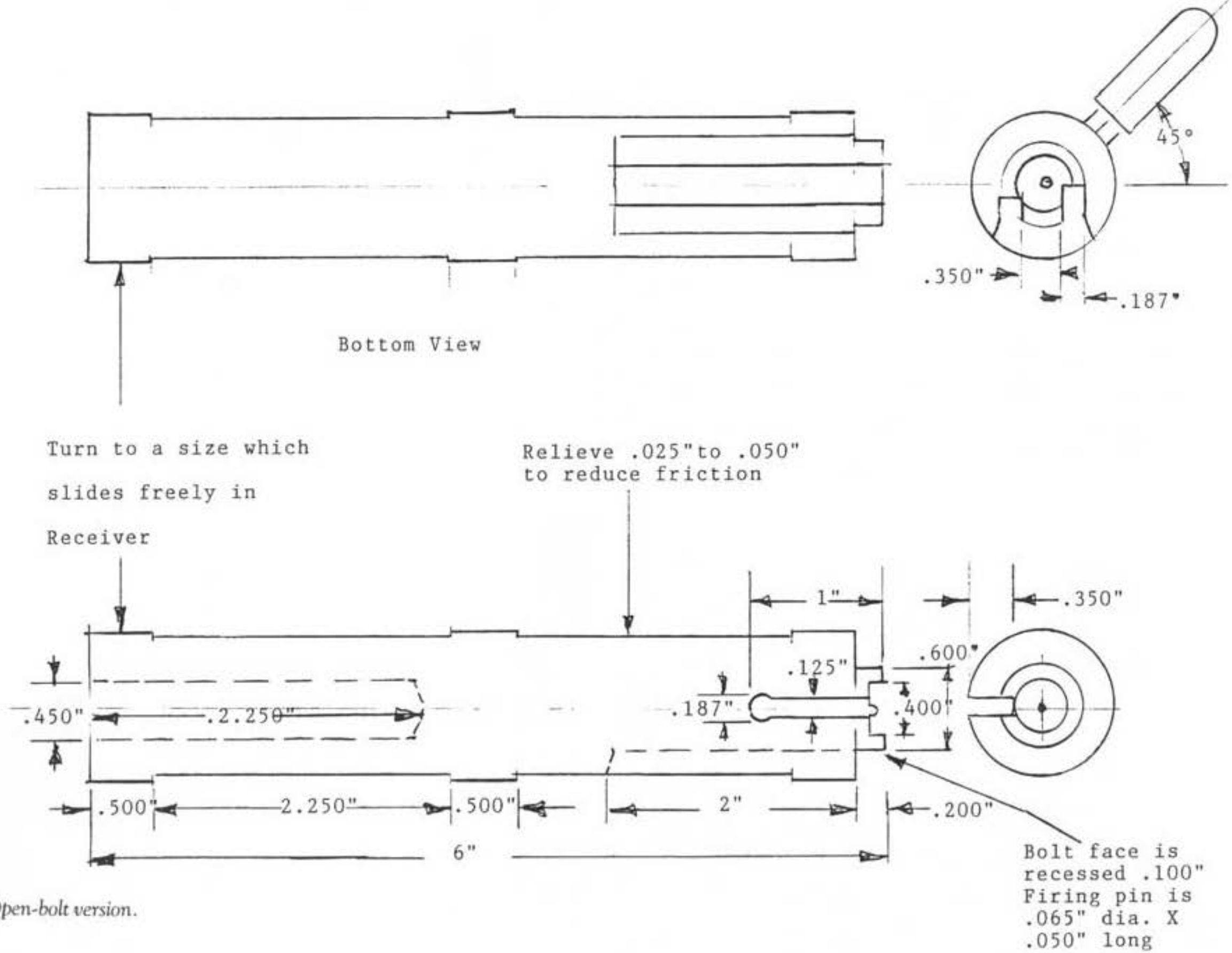

Open-bolt version.

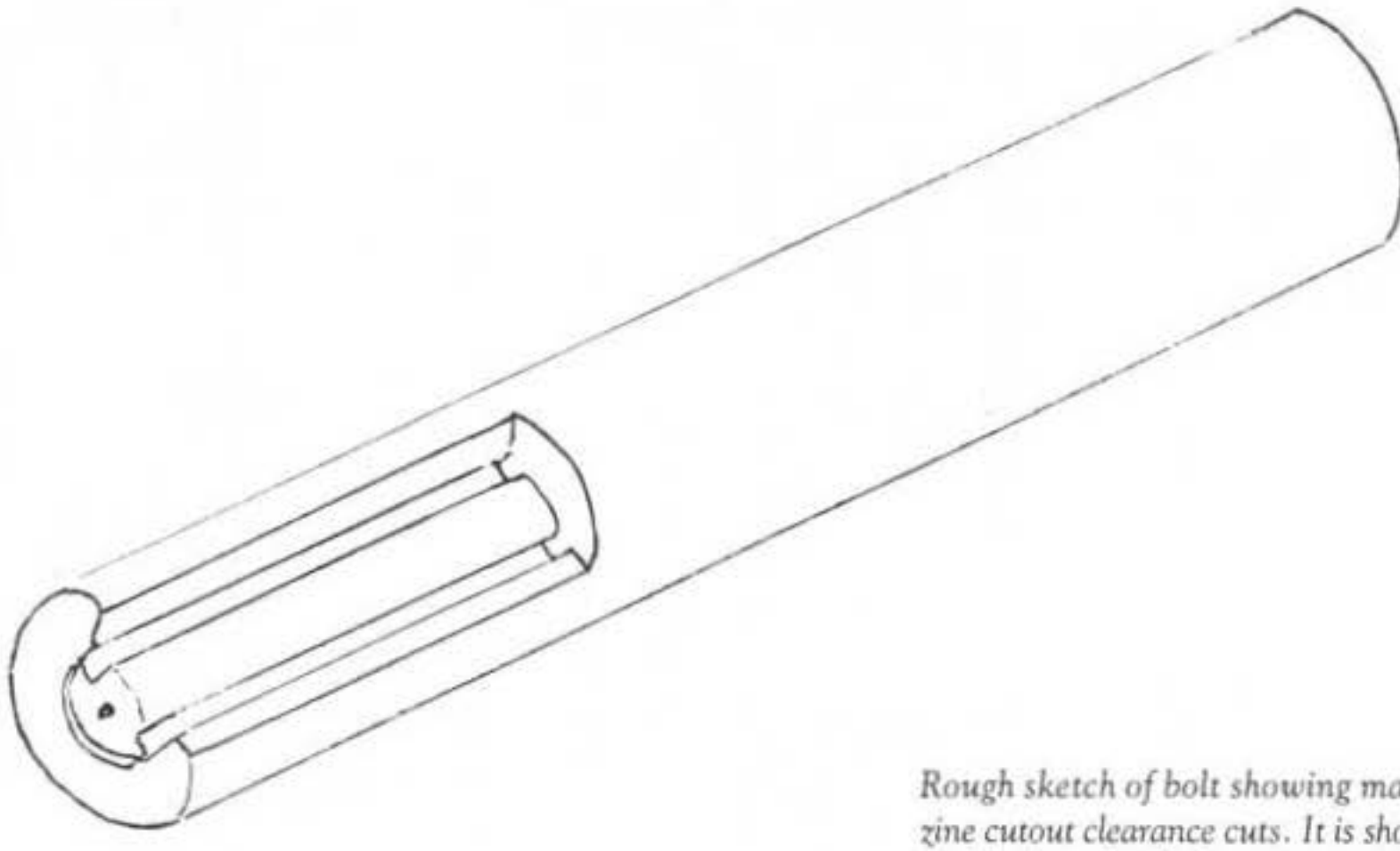

Rough sketch of bolt showing magazine cutout clearance cuts. It is shown upside down for clarity.

drilled from the other end. Extreme care must be taken when using this small drill. It must be fed in very slowly, well lubricated, and cleaned frequently. If overloaded it will almost certainly break off in the hole, which will spoil the work because it will require more time and effort to remove it than to simply start over with another piece of material.

Reverse the bolt in the chuck and drill a hole to accept an M1911 Colt recoil spring. Since these springs measure approximately .435 inch in diameter, use a slightly larger drill to provide clearance. Either a 11.5-millimeter drill measuring .4528 inch or a 29/64 inch that measures .453 inch will suffice for this. The hole should be 2 1/2 inches deep.

The closed bolt must be drilled using three different diameters: one for the recoil spring, which is the same size and depth as for the other bolt; a smaller size to clear the firing pin head; and another for the firing pin body and return spring. These should be drilled to the depths and sizes shown in the drawing.

You can reduce friction by turning the bolt body to a diameter some .025 inch smaller than required, leaving three full diameter bands 3/8 to 1/2 inch wide, one at each end and one in the middle.

Cut a slot to allow installation of the extractor in the right side at the forward end. This will be in a nine o'clock position when viewed from the front. This should be 1/8 inch wide, 1 inch long, and .350-inch deep. Make a 3/16-inch-diameter spring pocket at the extreme rear end of the slot. This slot is easily cut with a 1/8-inch end mill and the spring pocket with a 3/16-inch end mill. It can also be done with the hand grinder or by hand by drilling intersecting holes to remove the bulk of the material and finishing with files and chisels.

Turn the bolt upside down, with the extractor slot in the three o'clock position when viewed

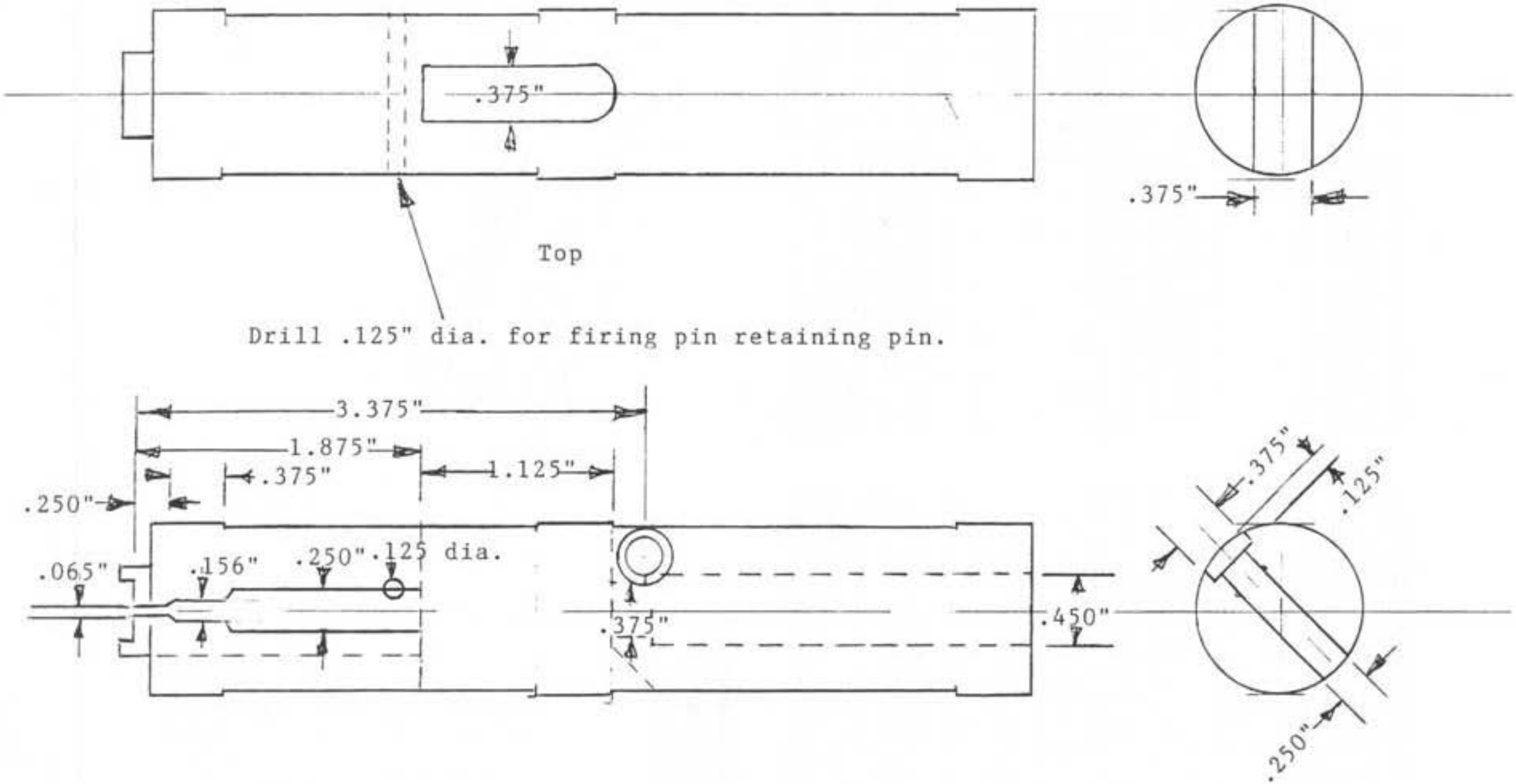

Closed-bolt, right side.

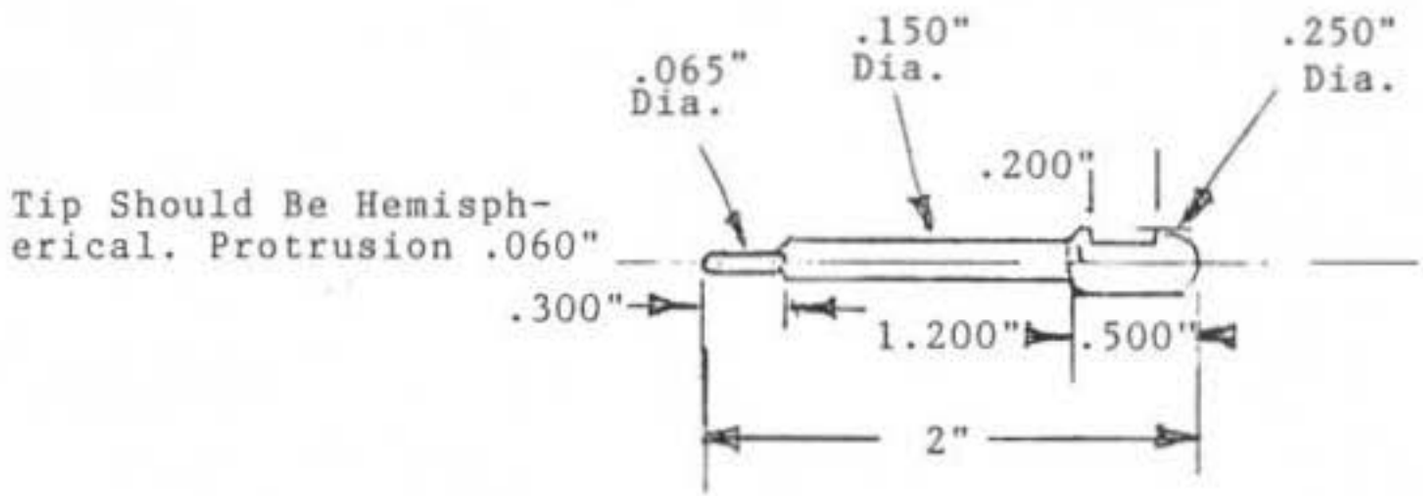

FIRING PIN, Closed Bolt

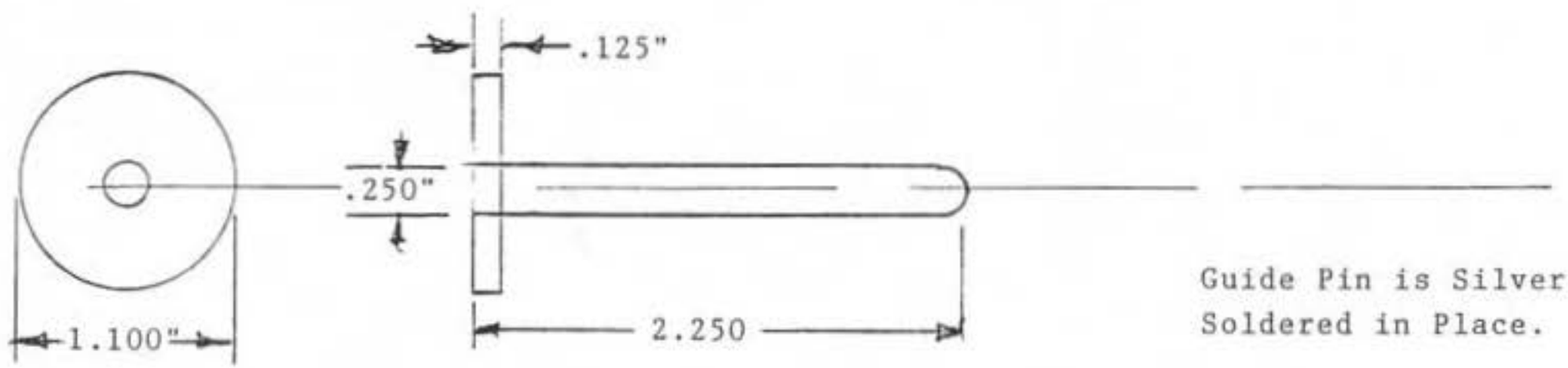

Recoil spring guide.

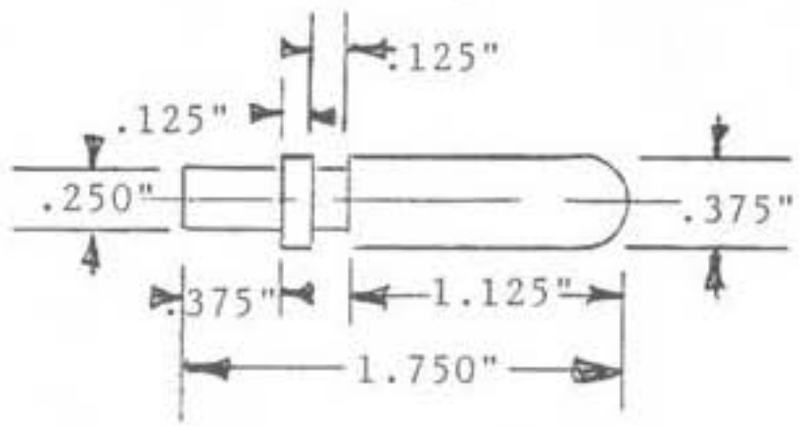

COCKING LEVER

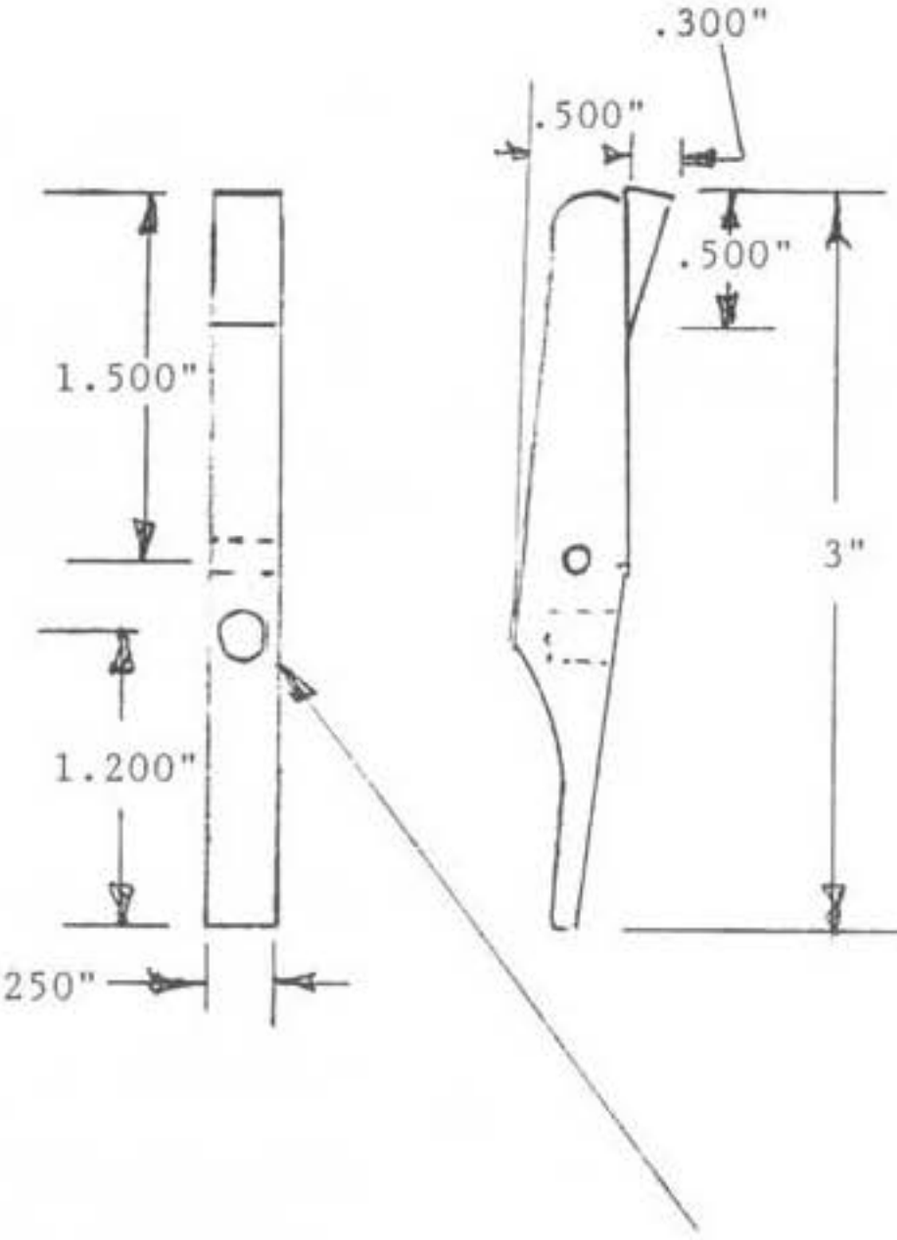

Spring pocket is .187" dia.
.300" deep

Note: Hole for magazine release pivot pin is drilled with
Magazine in place and release pushed up against it.

Magazine release.

from the front. A slot is first cut, 5/8 inch wide, 2 inches long, and 1/4 inch deep, measured from the front bolt face and on the bottom centerline. Then rotate the bolt 15 degrees and make an angled cut down one side of the opening. Rotate 30 degrees in the opposite direction, which will enable the same 15-degree angle to be cut along the other wall. Then, using a 3/16-inch end mill, cut a slot along each side of the bottom, leaving a strip .350 inch wide at the bottom of the bolt face. These are to provide clearance for the ejector as well as the magazine lips. The one on the left side, as viewed from the front and with the bolt upside down, provides clearance for the ejector and should be cut .225-inch deep. This is the one on the inside, on the opposite side from the ejection port. The other slot needs only to be .100 inch deep. The strip between the two grooves should be rounded on the edges and polished as smooth as possible, because this surface contacts and rubs against the top cartridge in the magazine as the bolt reciprocates.

If the closed bolt is used, you must cut a slot 3/8 inch wide and 1 1/4 inches long, beginning 1 1/2 inches back of the bolt face and extending along the centerline to the rear. The radiused corners of the slot, at least at the forward end, should be filed square. The back edge, at the bottom, should be relieved at a 45-degree angle. The hammer travels in this slot and contacts the firing pin at the front face. Though not really necessary, if you cut this slot entirely through the top of the bolt, it will make access to the firing pin easier.

It is possible to cut these openings by hand, but it certainly isn't easy. By the time you are finished you'll wish that you had gone out and bought a milling machine or at least paid someone with one for an hour's work to do it for you. But if you must, it can be done.

Locate and scribe a centerline down the bottom side of the bolt. This can be done with the lathe, the same way we did the receiver. Locate and scribe two more lines, 3/8 inch from the centerline, and one on each side. Draw these lines, parallel to the centerline, from the front edge of the bolt to a point two inches to the rear. Draw another line connecting the two. Now, scribe another series of parallel lines 1/8 inch inside these lines.

A template can be made, either by tracing the drawing or by measuring directly off the magazine you intend to use. The template and dimensions shown in the drawings are correct for a Sten gun magazine. An outline of the opening to be made should be scribed on the bolt face.

The material inside these scribed lines must be removed by some means. If done with the milling machine, as already described, it isn't much of a job. If, however, you are required to do it by hand, you can figure on most of a day's work, several blisters, some sore muscles, and assorted cuts and bruises. You will probably decide that it can't be done several times before you finish. But don't give up; it can be done. The reason I am sure of this is because I had to do it on the first gun of this type I made.

Some type of depth stop is needed to prevent your drilling deeper than required. If a drill press is used, there will be no problem. Simply use the depth stop on the drill press. However, if a hand drill is the only kind available, some sort of stop must be attached directly to the drill bit. A collar can be made from a piece of tubing that is epoxied or soldered in place, or from a nut or washer that will just slip over the drill. Make up both a 1/8- and 1/4-inch drill in this manner by securing a depth-limiting collar in place on each.

Center punch marks are made 1/4 inch apart around the inside scribe lines and drilled on the punch marks using the 1/8-inch drill first and then the 1/4-inch drill. The holes parallel to the centerline must be angled inward, toward the center, at an angle of 15 degrees. The included angle of the finished sides will be 30 degrees.

After these are drilled along both sides and the end, stand the bolt on end, face up, and drill another series of holes two inches deep. Enough material must be left to form the radiused portion

as shown in the drawing. If you have to cut this opening in this fashion, I strongly recommend that you obtain a drill press with a good vise for the job.

With all the outline holes drilled to the proper depth and correctly spaced, there will be very little surplus metal remaining in the cavity that we want empty. To remove any remaining material, just slide a small chisel under one corner and hit it with a hammer. The entire slug of surplus material should fall free.

All that remains now is to remove enough additional metal to form an opening in the shape of the template. This will enable the bolt body to slide freely over and around the loaded magazine, allowing the radiused portion to pick up a cartridge and chamber it. Put a sturdy handle on a 10-inch file and wrap several layers of tape around the 4 or 5 inches adjacent to the handle. Then, by using both hands near the handle end, the forward end of the file can be used to greater advantage, together with chisels, to properly form and smooth the opening.

Make the extractor, as shown in the drawing, from 1/8-inch flat stock. Don't try to use common sheet metal for this. It will batter and deform at the hook end. Use high-grade material even if it means cutting a piece of car spring to the correct thickness or sawing a thin slice from the end of an axle to make it from. When cut to the shape and dimensions shown, put it in place in the extractor slot and drill the hinge pin hole. Place a close-fitting coil spring in the spring pocket and pin the extractor in place. It should open far enough at the front for the hook to snap over a case rim without binding. If the open-bolt version is used, you must use an unprimed case to test it.

When using the closed-bolt version, a firing pin must be made to the dimensions shown. A hole is drilled in the location shown for a cross pin to retain the firing pin. A close-fitting plug should be inserted in the firing pin hole to support the drill as it starts through the opening. If unsupported, the drill will deflect, or crawl, to the unsupported side and probably break. The firing pin must have a slot cut on one side to clear the retaining pin. It is assembled by putting the return spring in place over the firing pin body and inserting it in the bolt where it is held in place by the cross pin. The firing pin protrusion should be from .050 to .060 inch. This can be checked by holding a flat object flush against the end of the firing pin and opening. This will cause the tip to protrude from the bolt face, just as it would if pushed forward by the hammer. The firing pin should be made slightly longer than specified and cut to length after assembly and trial.

With the bolt inside the receiver and in its correct closed position, indicate the location for the cocking lever by marking through the slot in the receiver. The cocking lever must not contact the end of the slot. Remove the bolt from the receiver and drill the hole, first with a 1/4-inch drill, which can go all the way through the *open* bolt but must stop at the hammer slot in the *closed* bolt. The hole is enlarged to 3/8-inch diameter for the first 1/4 inch. This will provide a shoulder to keep the cocking lever at its proper depth.

Make the cocking lever to the dimensions shown, at least for the end that fits into the bolt. The portion that protrudes outside the receiver can be of any shape or length desired. When assembled, the bolt must move back and forth freely, without binding.

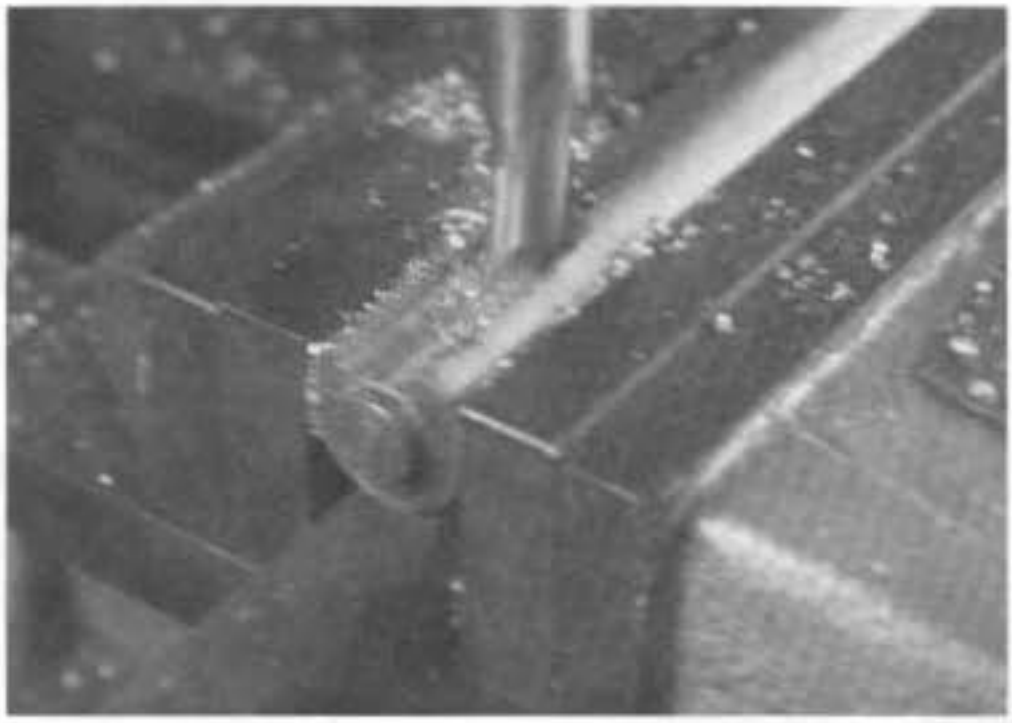

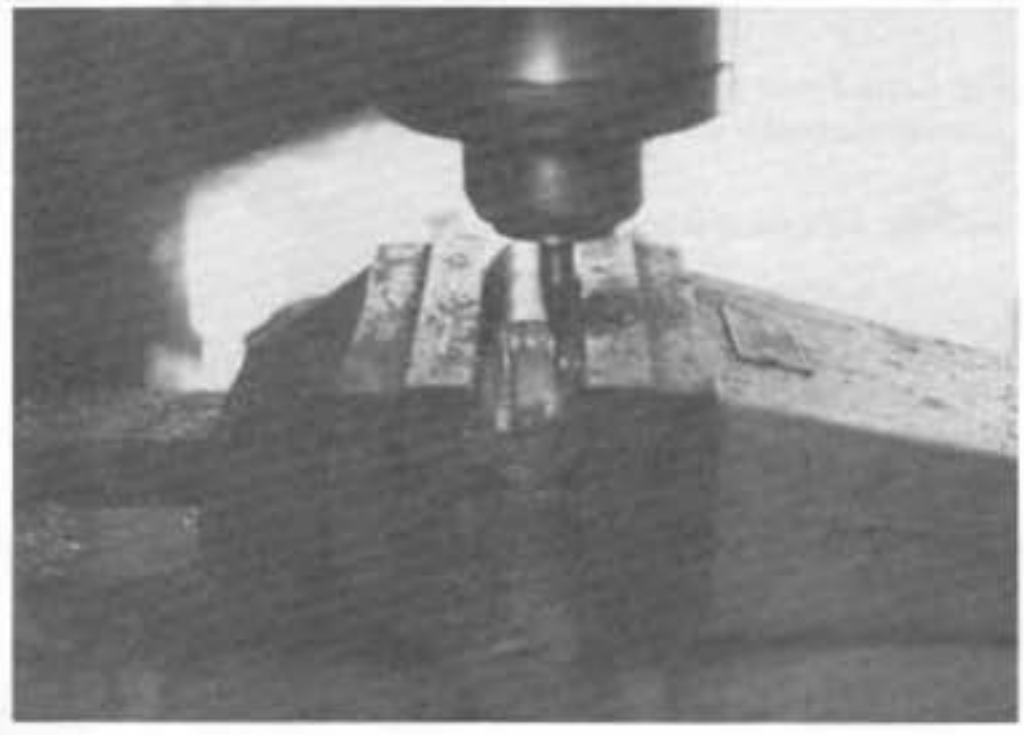

Above: Make magazine clearance cuts with milling machine.

Right: Angle sides of bolt cuts by using end mill.

Below: Make ejector and magazine lip clearance cuts by using end mill.

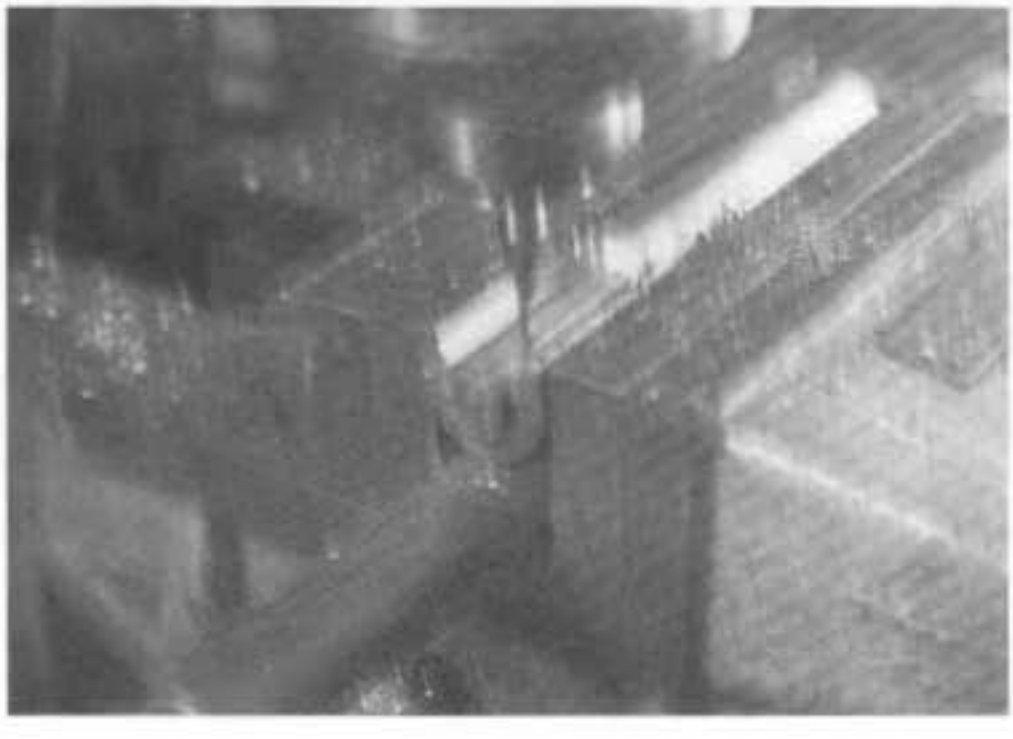

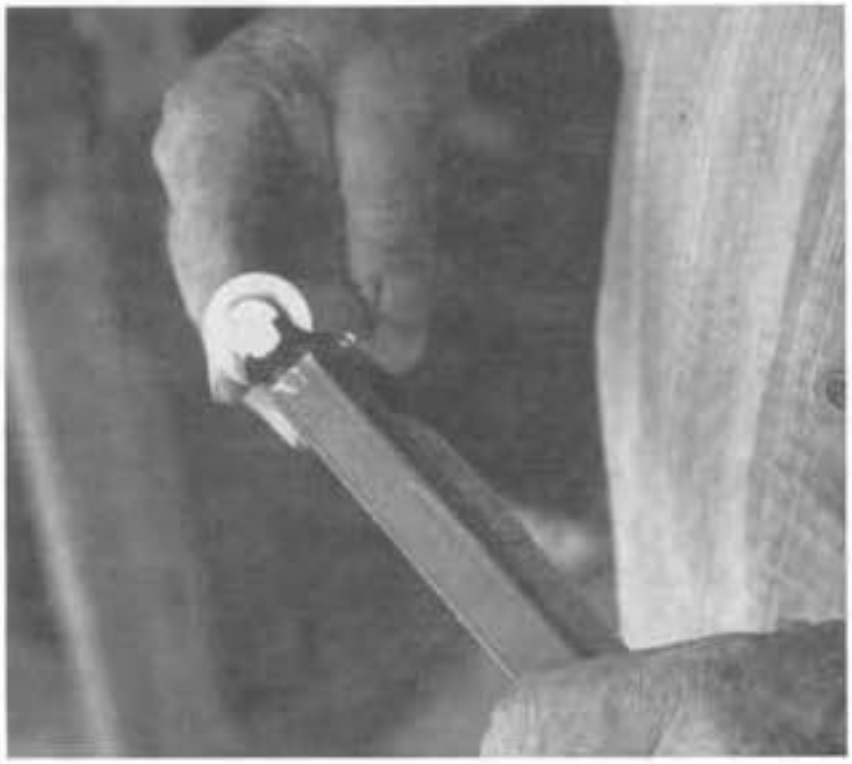

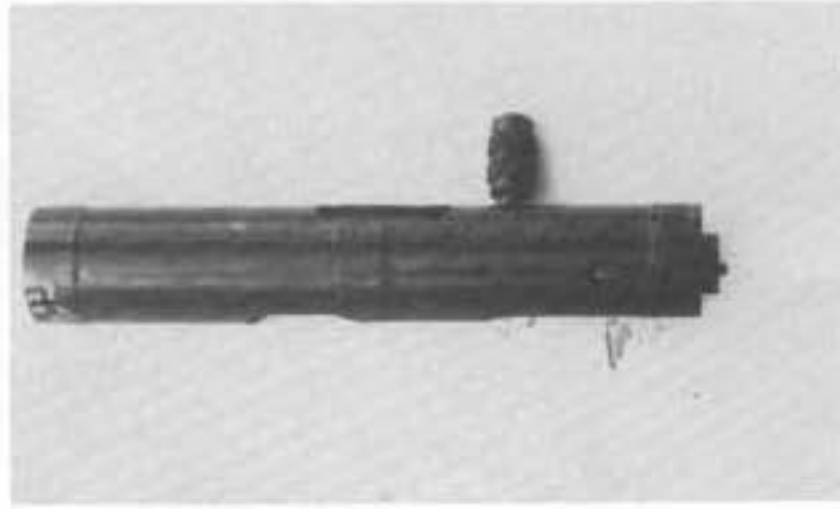

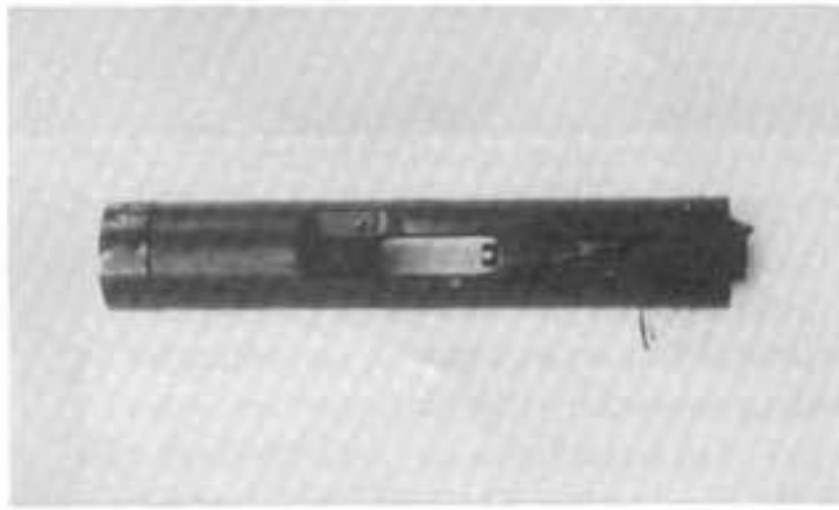

Top Left: Front view of bolt, showing relationship to magazine.

Top Right: Right side of finished bolt.

Upper Middle Right: Bottom view of finished bolt.

Middle Left: Bolt, front view.

Lower Middle Right: Bolt, top view with cocking handle.

Bottom Left: Closed bolt shown with recoil spring, guide, and cocking lever.

Bottom Right: Open bolt (lower) shown with closed bolt. The same recoil spring and guide are used on both versions.

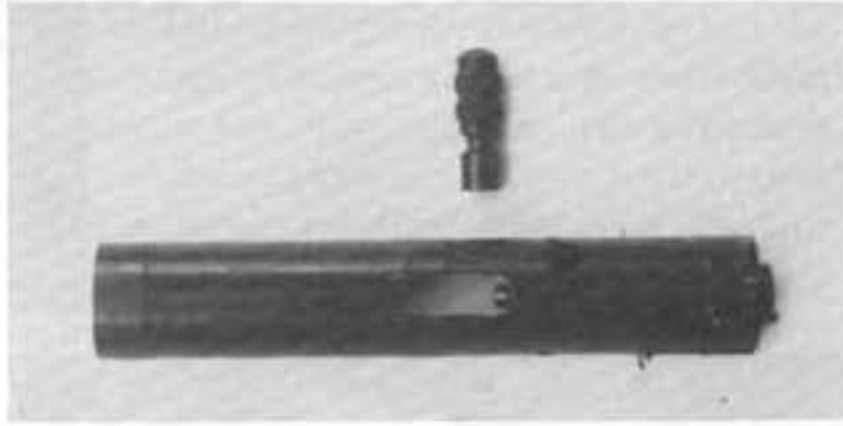

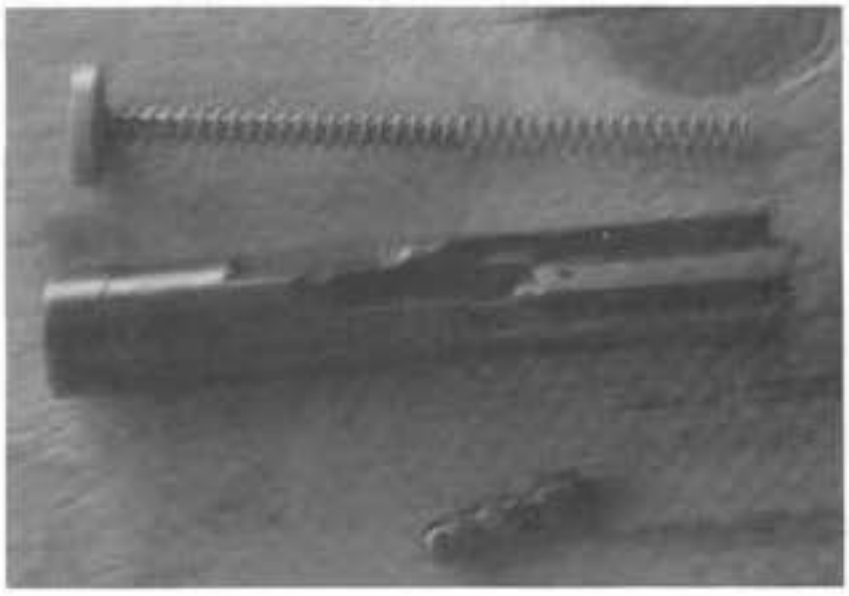

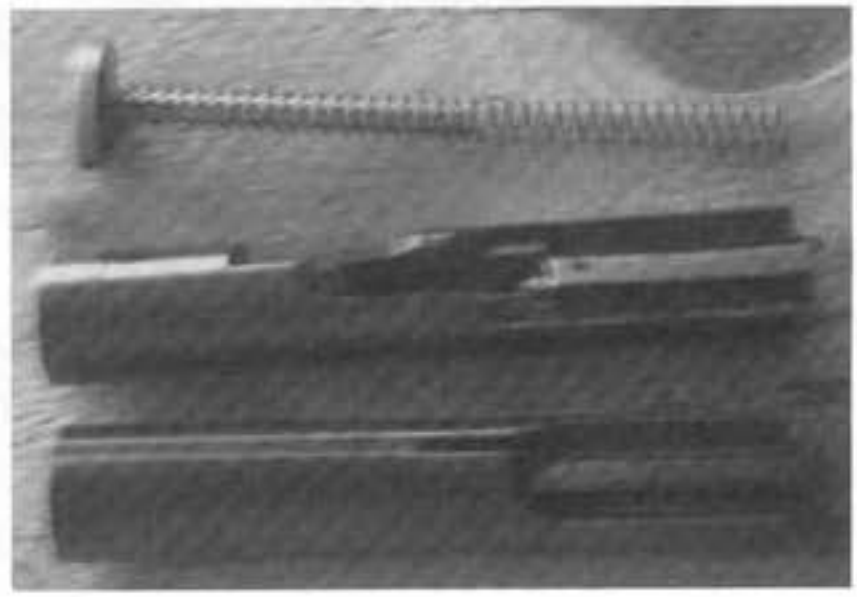

CHAPTER

5

Barrel

At the present time there are at least 10 barrel manufacturers that can supply .35-caliber barrel blanks. Although a true 9mm bore is usually .003 to .004 inch smaller than the .357-inch groove diameter common to the .35-caliber barrel, several suppliers will send you the same size regardless of which one you ordered. In use you will never notice a difference. These blanks are available in many configurations ranging from featherweight blanks to bull barrels up to 1 1/2 inches in diameter for an entire length of 30 inches or more. Since this project requires a 6-inch-long section with a 1-inch diameter, it would seem to make sense to acquire a barrel blank slightly more than 24 inches long. Full-diameter blanks are usually somewhat longer than their advertised length. This length, with a minimum diameter of 1 inch, will give you enough material for four barrels. Barrel suppliers will charge you almost as much for a short length as they will for the long one. So even if you don't need it, the extra won't cost much, and it may be valuable property in the future.

As this is written, there are several companies in the business of manufacturing and selling chamber reamers. These range in price from a low of around $30 each to a high of nearly $100. These are usually available in the form of roughing reamers, which are used to remove the bulk of the excess metal, and finish reamers, which are intended, as the name suggests, to cut the chamber to its finished size and shape. Because only a small amount of metal is removed in a chambering job such as this, a finishing reamer will suffice. Specify that it will be used in a rifled barrel when you order it. If you don't, the manufacturer may send you a reamer with a pilot too big to enter the bore because many pistol caliber reamers are made with the pilot ground to groove diameter for use in pistol cylinders. I am aware that the 9mm cartridge is used primarily in full and semiautomatics, but there are revolver cylinders chambered for it on occasion, so to avoid a foul-up, specify that the reamer will be used in a rifle barrel.

Incidentally, the higher priced reamers will usually come with an integral throat reamer,

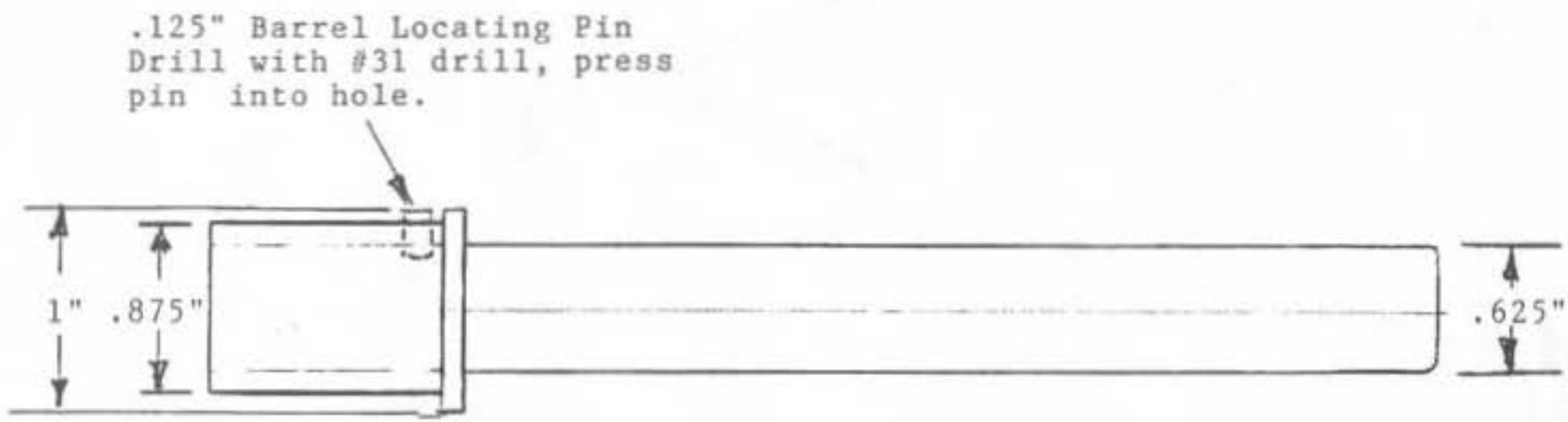
.125" Barrel Locating Pin
Drill with #31 drill, press
pin into hole.
1"
.875"
.625"

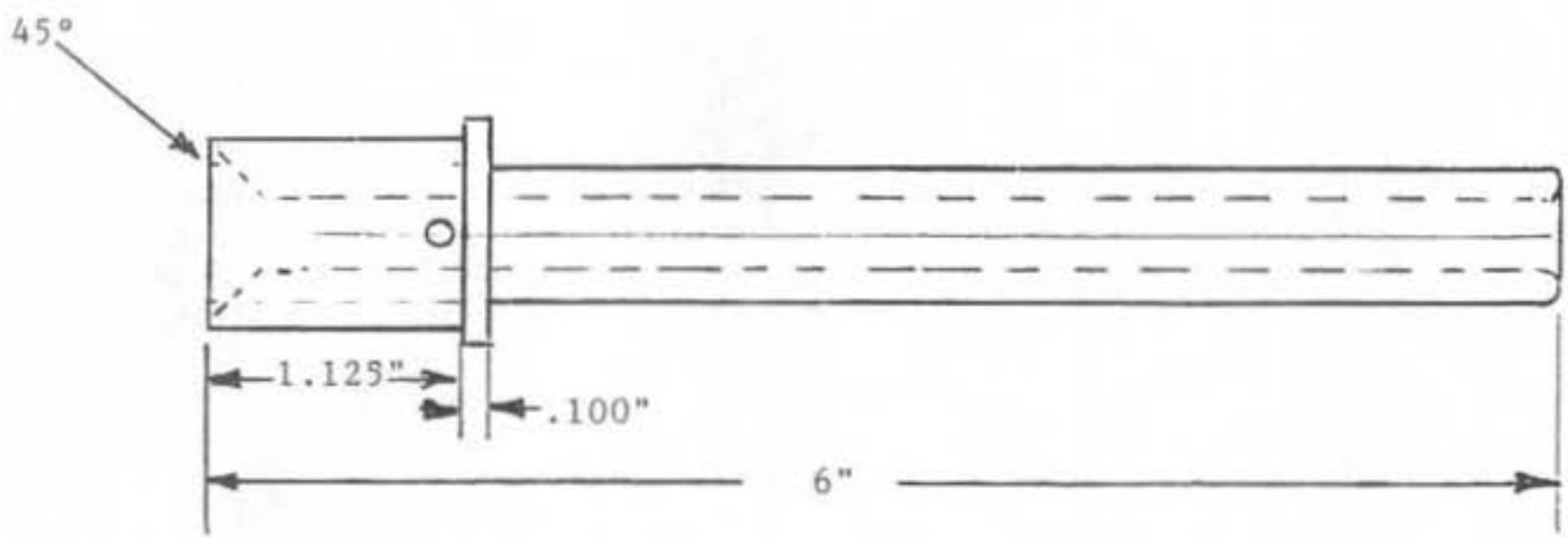
45°
1.125"
.100"
6"

Barrel.

allowing you to perform the entire chambering operation with a single reamer. The cheaper ones often require the additional use of a separate reamer to cut the throat portion. In most cases the higher priced reamers, such as those made and sold by Clymer Manufacturing Company, will prove to be the cheapest in the long run.

The barrel proper is rather simple to make. Cut a section of the barrel length to the desired length (it isn't written in stone that this barrel must measure exactly 6 inches) and square the ends in the lathe. Turn the breech end to a diameter of .875 inch for a length of 1.125 inches. Directly in front of this, form a flange .100 inch wide and 1 inch in diameter. The remainder is turned to a diameter of .600 to .625 inch, as you prefer.

The breech end of the barrel should have a 45-degree approach cone to facilitate feeding. With such an angled approach cone, if the cartridge ever moves far enough forward for the bullet to contact the barrel, it will be guided into the chamber without the stovepiping or hangups common in other designs. Crown the muzzle end by using a lathe tool ground for the purpose. Both the crown and the breech cone should be polished to the highest degree attainable, using progressively finer grits of abrasive cloth or paper.

Determine chamber depth by measuring the distance from the front face of the receiver to the bolt face with the bolt held forward as far as it will go. The breech end of the barrel is also measured from the end of the approach cone to the flange. This length is slightly longer than the first measurement, so subtract the first measurement from this one. The result will be the depth of the cartridge head below the end of the approach cone.

Cut the chamber by feeding the chamber reamer into the breech end of the barrel with the barrel chucked in the lathe while turning at the slowest speed available; pressure from the tail stock ram will be used to feed the reamer into the bore. Do not attempt to hold the reamer in a rigid tail stock chuck. Keep it from turning through the use of a hand-held tap wrench, clamp, small wrench, or some similar arrangement that can be released and allowed to turn with the barrel in the event the reamer should suddenly decide to seize. Keep the reamer well lubricated, and withdraw and clean frequently. As you approach the finished depth, clean the chamber and check your progress frequently. When the measurement between the chambered case head and the barrel end coincides with the previously established measurement, it is time to stop. Another method is to secure the barrel by clamping it between blocks in a vise. Then turn in the reamer by hand using a tap wrench or reamer drive. If this method is used, care must be taken to hold the reamer straight, in line with the bore, with no side pressure exerted in any direction.

Drill a hole, as shown in the drawing, to allow a locating pin to be pressed into it. This ensures that the barrel is located in the same position each time it is removed and replaced. This pin fits into a matching slot cut in the threaded end of the receiver. The hole is drilled with a #31 drill and a slightly tapered 1/8-inch pin pressed into it. Care should be taken not to drill into the bore.

Locate a slot to clear the extractor by coating the extractor front face with some sort of marking compound such as lipstick or Prussian blue and, with both barrel and bolt installed in the receiver, pushing the bolt forward against the barrel. Remove the barrel and the resulting imprint left by the marking compound will show the location of the slot to be cut. This can be cut either with a milling cutter or the hand grinder.

If the time should ever come when commercial barrels are no longer available, we will have to make our own. A method for doing this is included in *Vol. I*.

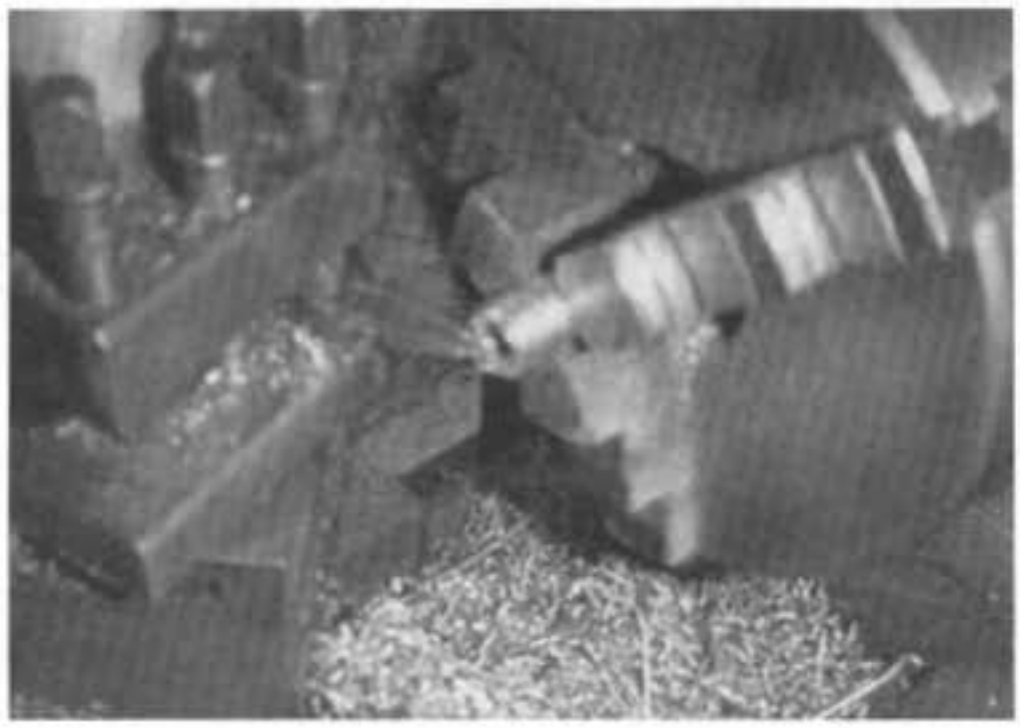

Above: Barrel is turned to required dimensions.

Right: Muzzle end is crowned using lathe tool ground for this purpose.

Below: Breech end is cut to length.

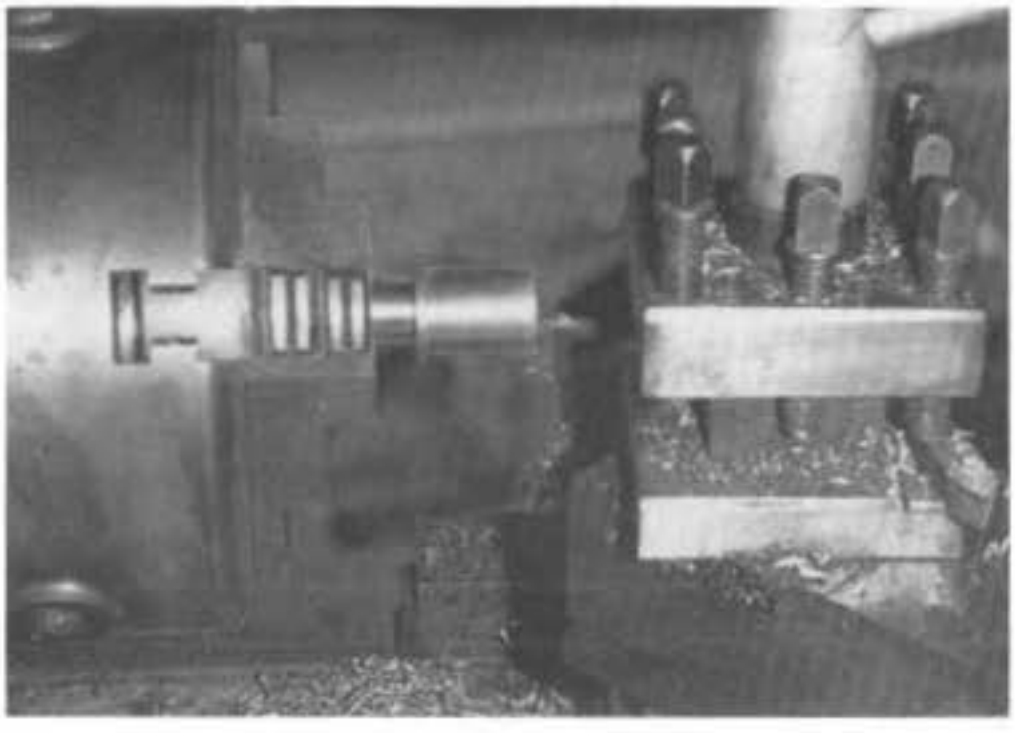

Right: Approach cone is cut using compound feed.

Below Right: Finished barrel.

Below: Barrel in place is secured by being threaded on barrel shroud.

Bottom Right: Locating pin can be pressed into barrel hole by using a vise, as shown.

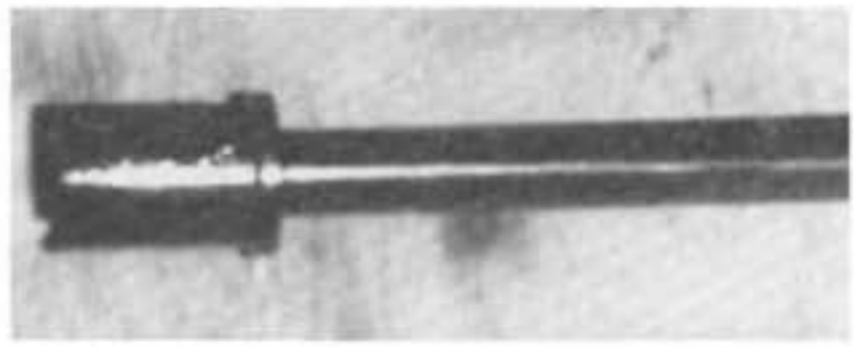

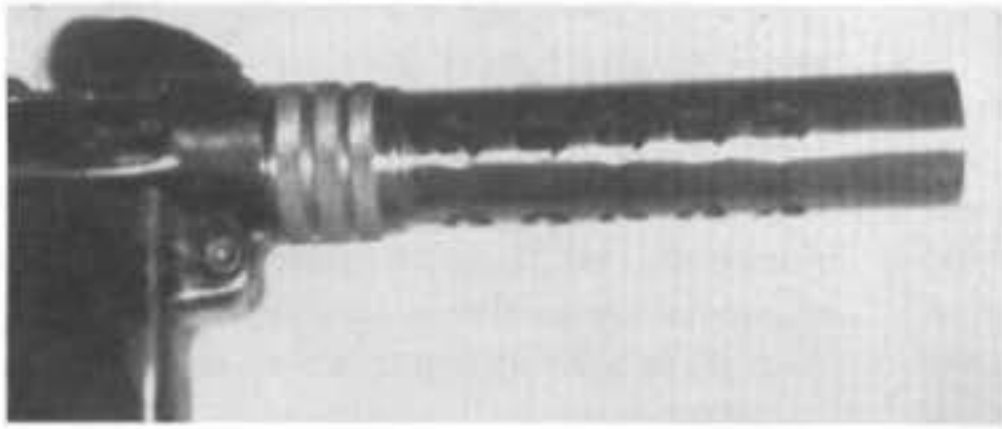

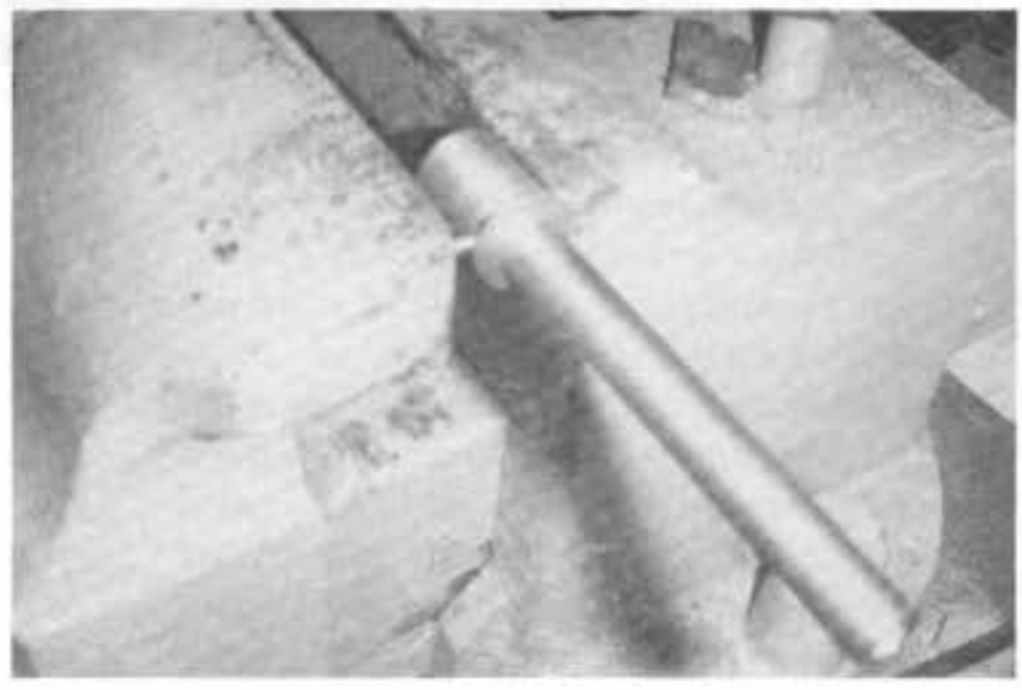

CHAPTER

6

Trigger Assembly

You can make a lower receiver, consisting of a trigger housing and magazine well, from 14-gauge sheet metal. It can be cut in one piece and bent around a form block. This requires welding a seam along the bottom. Or it can be made in two parts, which are considerably easier to form but require welding the same seam as before plus another down the front of the magazine well.

Regardless of which method is used, you have to make up a form block .900-inch thick, 1 1/2 inches wide, and 7 inches long. This will likely require cutting 1-inch-thick material thinner since material as thin as this is sometimes hard to find. It may be easier to bolt, rivet, or weld together a 3/8-inch thickness and a 1/2-inch thickness with an .025-inch shim in between; .22-gauge sheet metal is almost right for this.

Lay out a full-size pattern, or template, using the dimensions shown in the drawing. This is then scribed directly on the sheet metal and a full-sized blank cut to shape. This metal is too thick to cut with hand shears, so a fine tooth band saw should be used. It can be done with a hand hacksaw as a last resort, but it won't be fun.

If you use the one-piece blank, bend the magazine well portion around the form block by clamping the blank and form block in a heavy vise and bending the exposed side to shape with a block and heavy hammer. The opposite side can't be formed completely in the vise. But it can be started and partially formed and then finished with the hammer after removal from the vise. The ends of the two-piece blanks are bent at right angles either by the same hammer-and-vise method or through the use of a sheet-metal brake. The seam should be welded, using the form block as a spacer, before proceeding further.

Now that the two pieces are welded together, this blank is, for all practical purposes, the same as the one-piece job, and they are both treated the same from here on in. Turn the blank upside down and clamp it in the vise with the form block between the two sides. You should block up the area between the vise slide and the form block to keep it from moving downward in the vise. Then, using a heavy hammer and block, fold the lower

Cut from 14 ga. sheet, two required

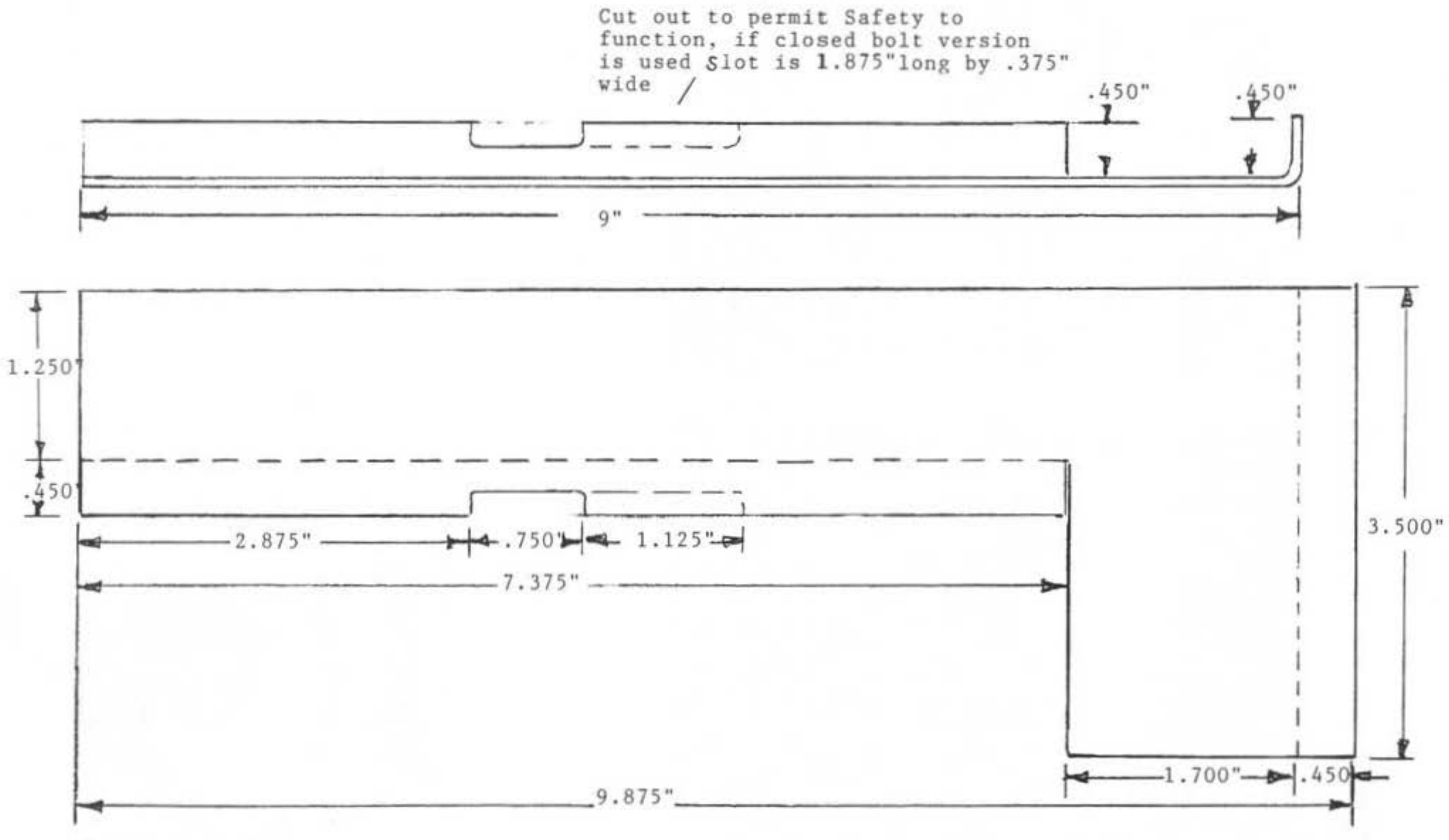

Lower receiver template.

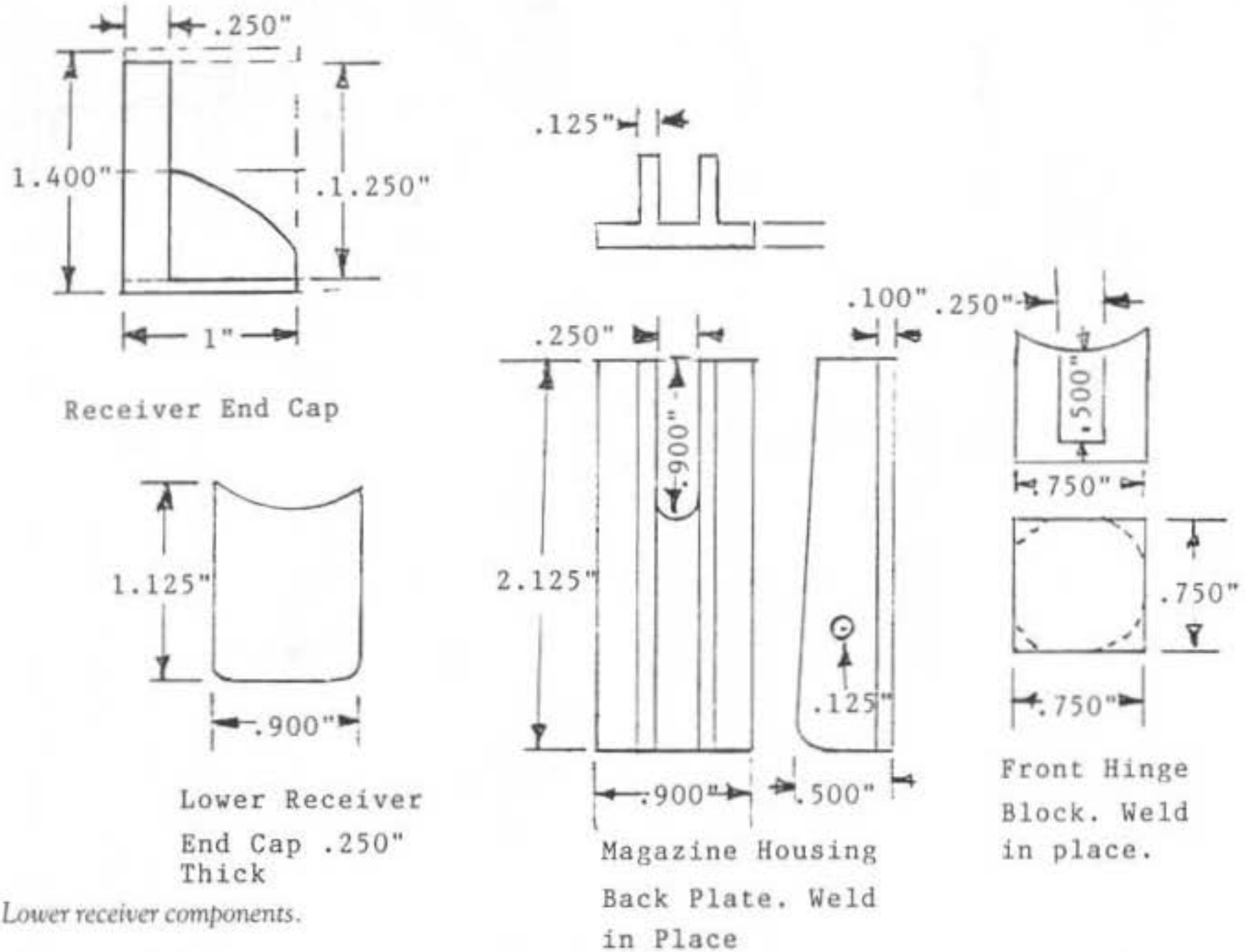

Lower receiver components.

sides over, forming the bottom of the lower receiver. Now weld the seam with the form block kept in place while the welding is done. Unsupported sheet metal has a bad habit of changing shape when heated.

Cut a back plate to size and weld in place across the back of the magazine housing. If a milling machine is available, this can be made with the magazine release housing integral. If not, you will need to use a sheet-metal plate welded across the back and to fold the housing from sheet metal and weld it in place. A slot must be cut through the back plate to allow the magazine release to engage the magazine. Weld a similar filler plate in place at the extreme rear end of the trigger housing.

Weld a 3/4-inch steel cube to the upper front of the assembly. The edges should be beveled and welded all the way around and built up above the surface, depositing enough extra metal to form a concave fillet around both sides and the bottom. Slot this block on the top center to accept the front mounting lug of the upper receiver.

The upper surface of the assembly should now be machined flat and square and cut on the inside to a concave cross section to match the radius of the upper receiver. This includes the block welded to the front end. The easiest way to do this is with a ball cutter in the milling machine, but it could be done with files if required. Now slot the front block to accept the front receiver lug using a 1/4-inch end mill.

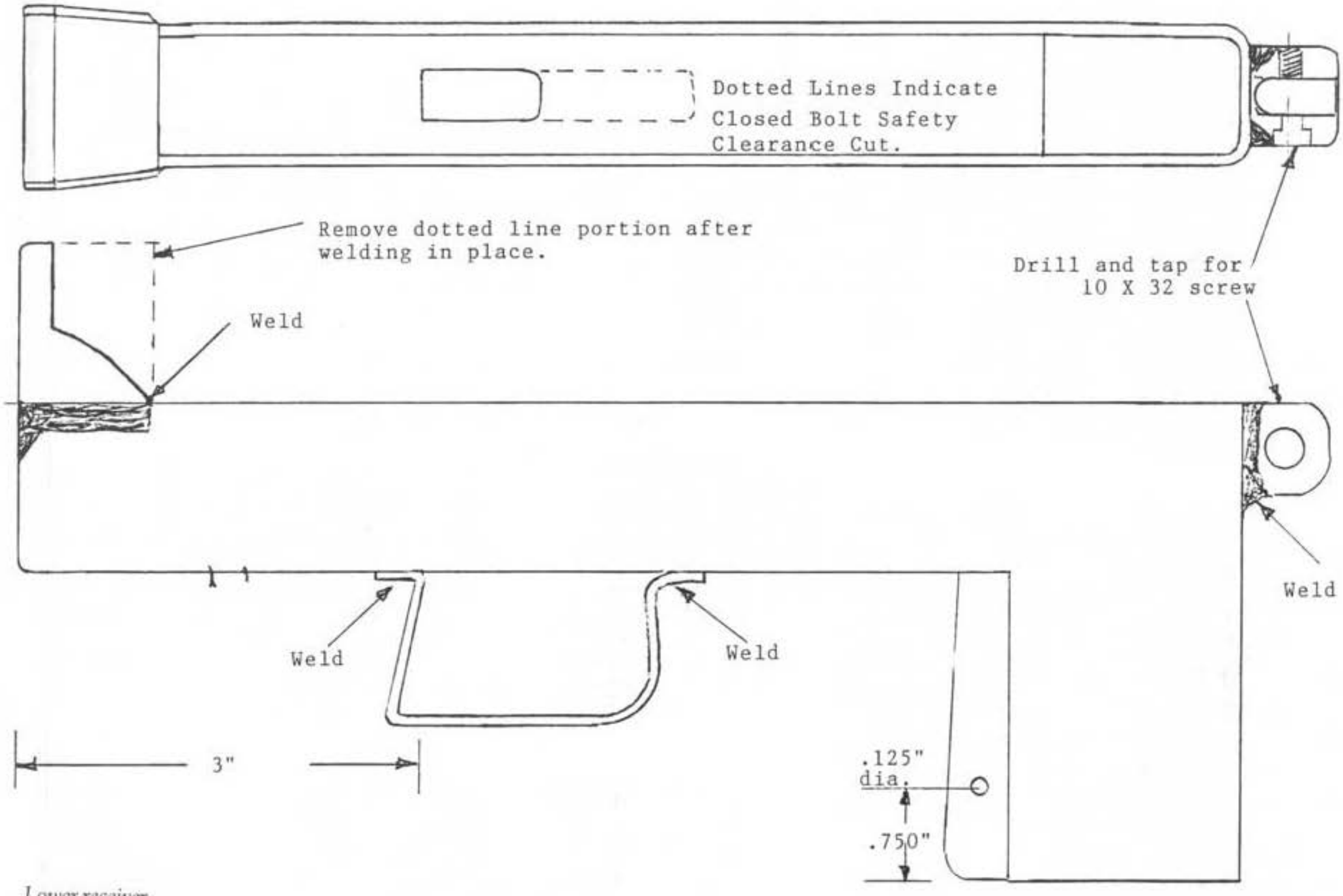

Lower receiver.

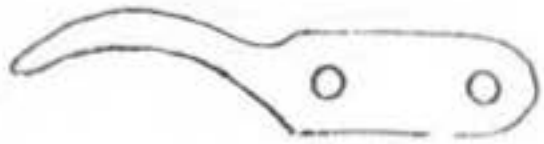

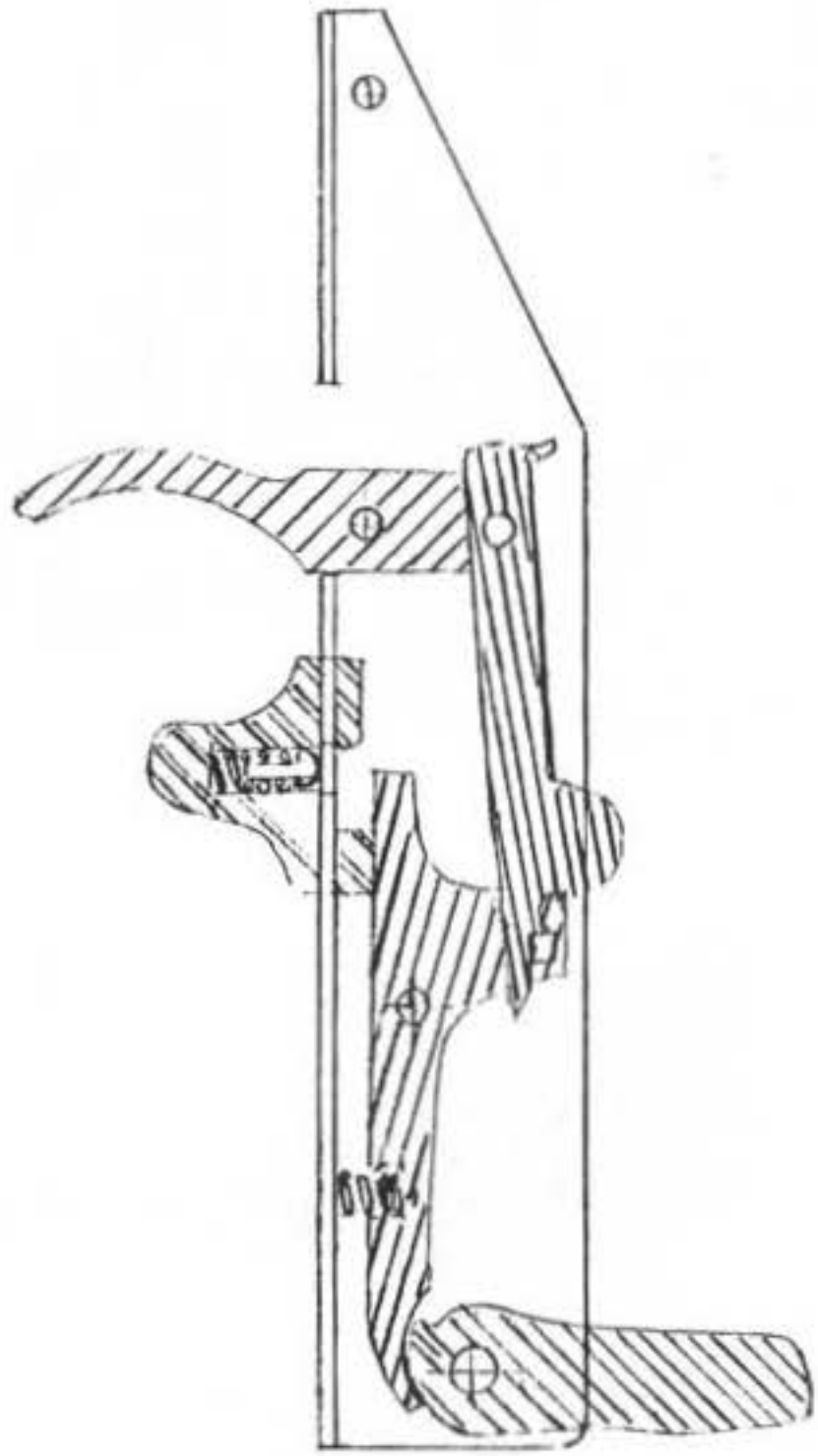

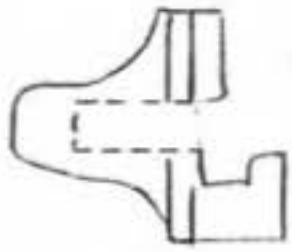

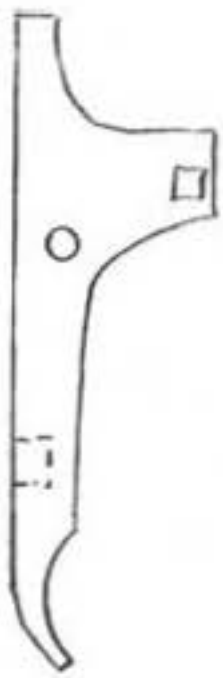

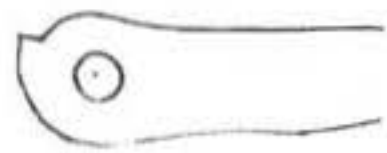

Closed-bolt trigger assembly.

The pull type Trigger and Trigger Bar Spring is used in both the open and closed bolt Trigger Assemblies.Spring should be approx. ¼" in diameter with considerable tension.

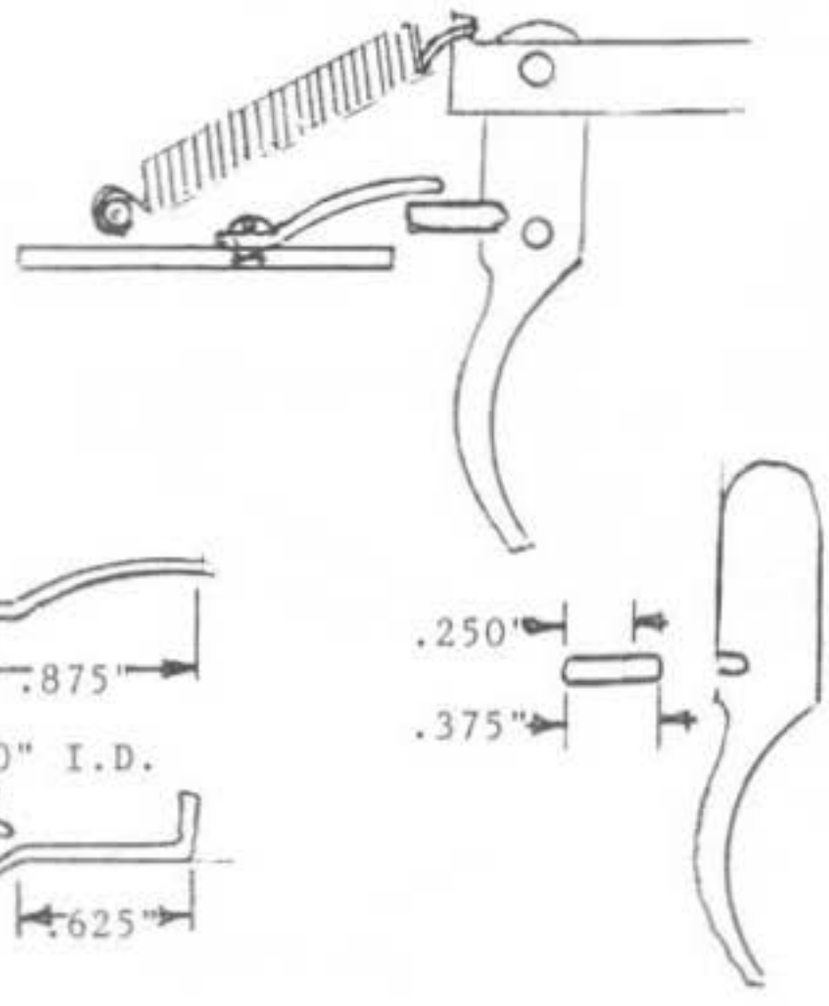

For the Open Bolt, Full automatic version only. The leg at the rear of the Trigger is cut from 12 ga. sheet metal and silver soldered in place. The spring is formed from .065" music wire and held in place with a #6 X 48 screw. The first sage of this trigger (semi automatic fire) is stopped by this spring. Pulling the Trigger further to the rear, against the stronger spring resistance, causes full automatic fire.

Trigger spring detail.

TRIGGER

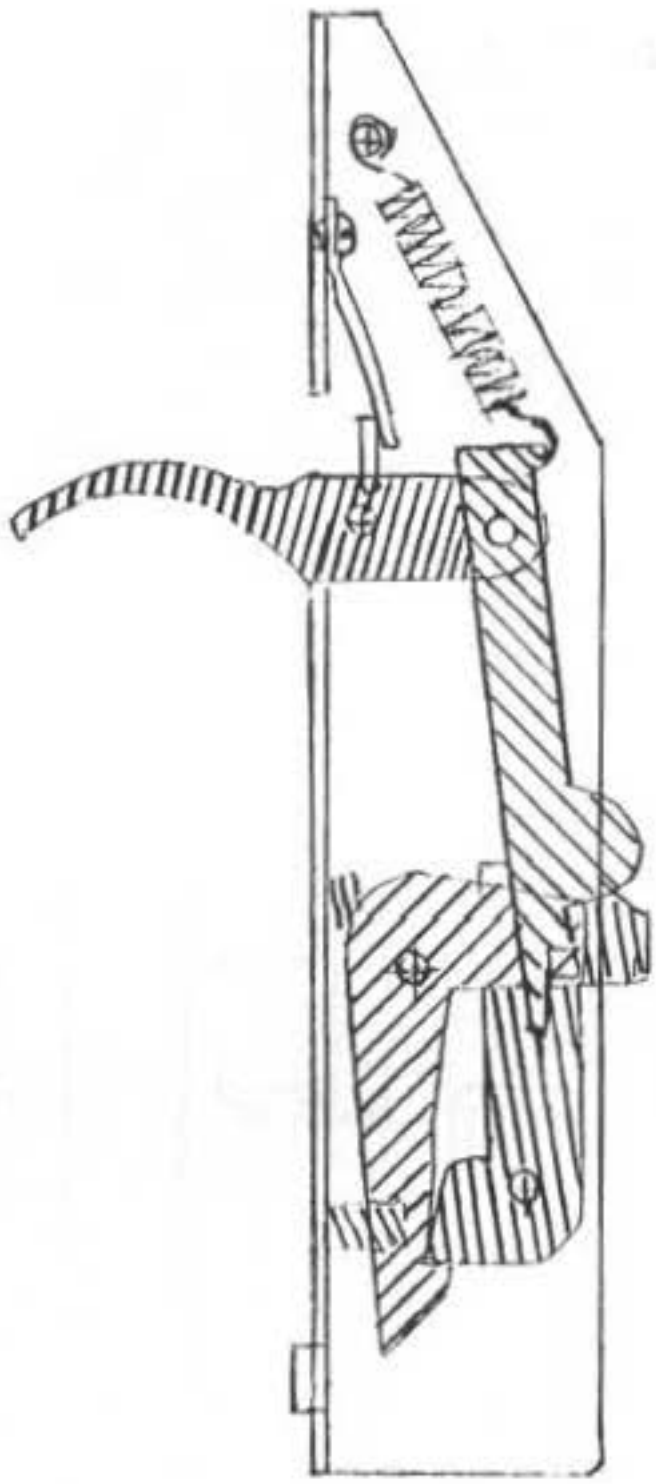

TRIGGER BAR

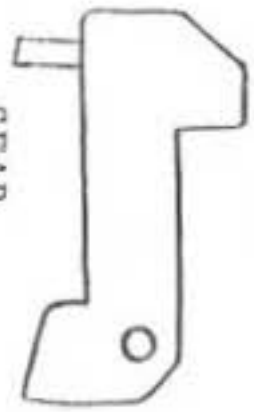

SEAR

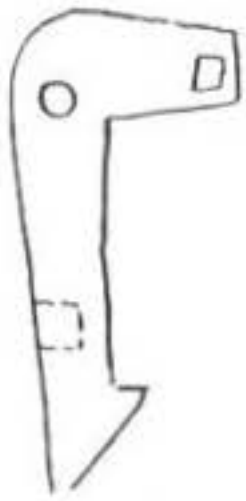

SEAR LATCH

Open-bolt trigger assembly.

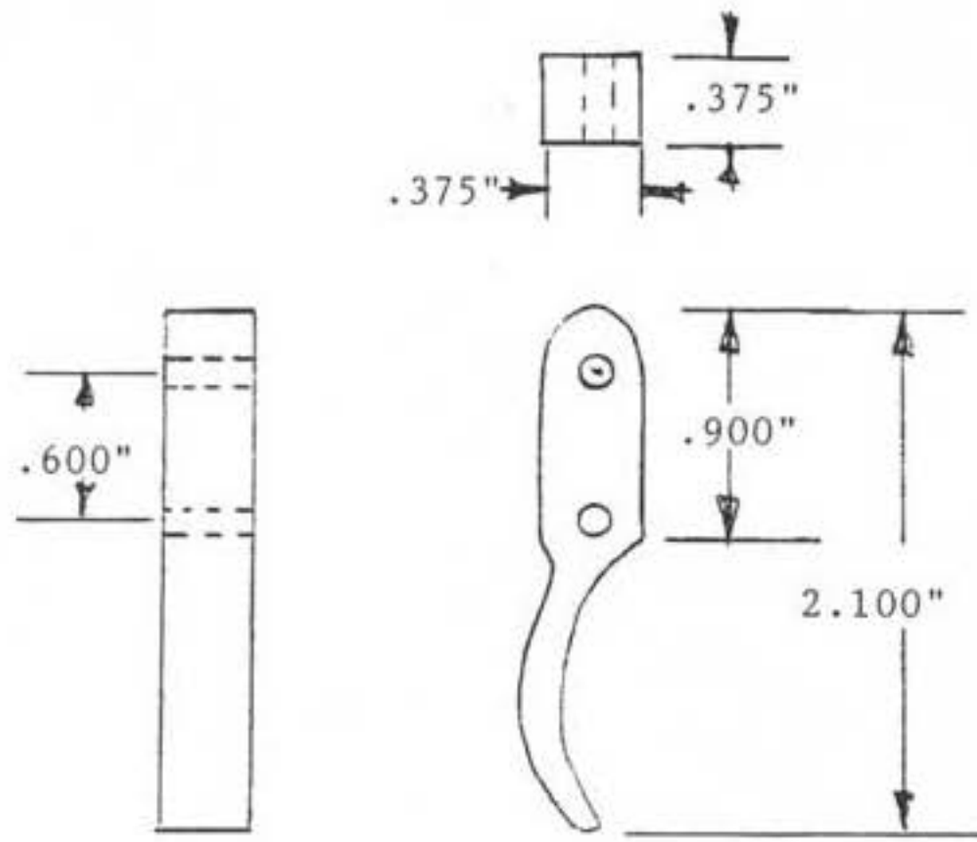

TRIGGER
Can be shaped as desired.
Only critical dimension is
distance between pin holes.

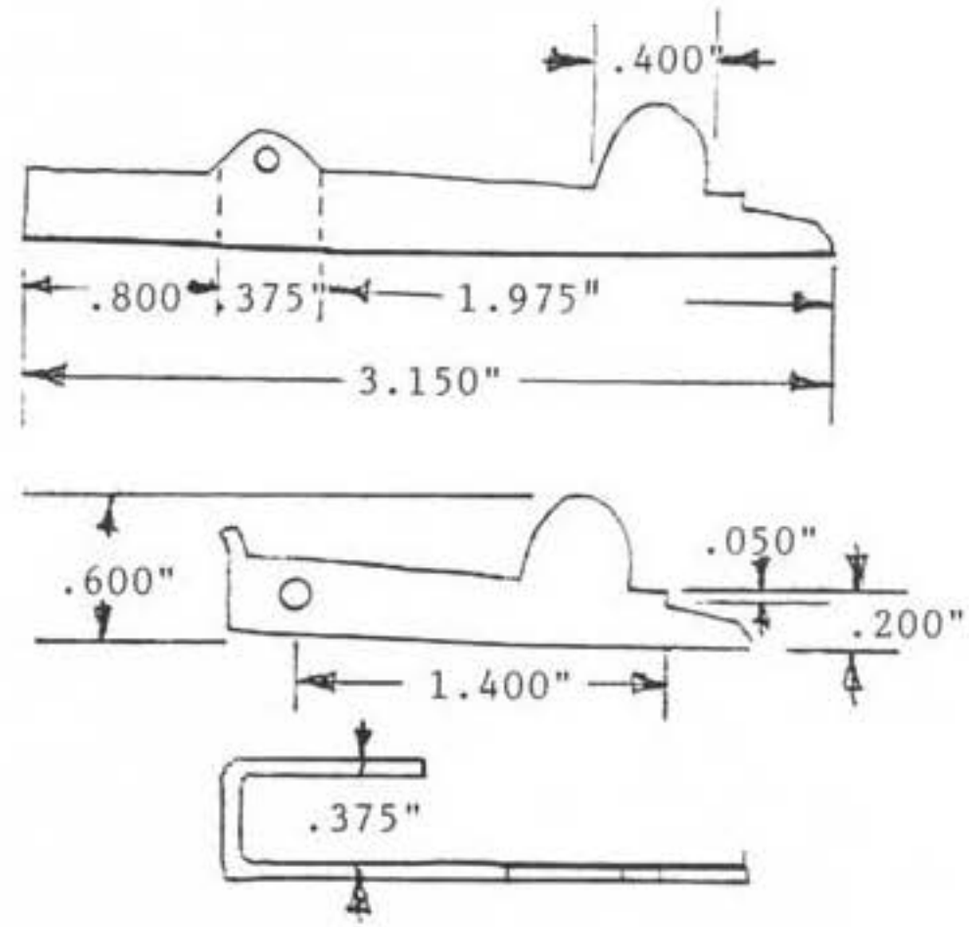

These parts are identical for both versions.

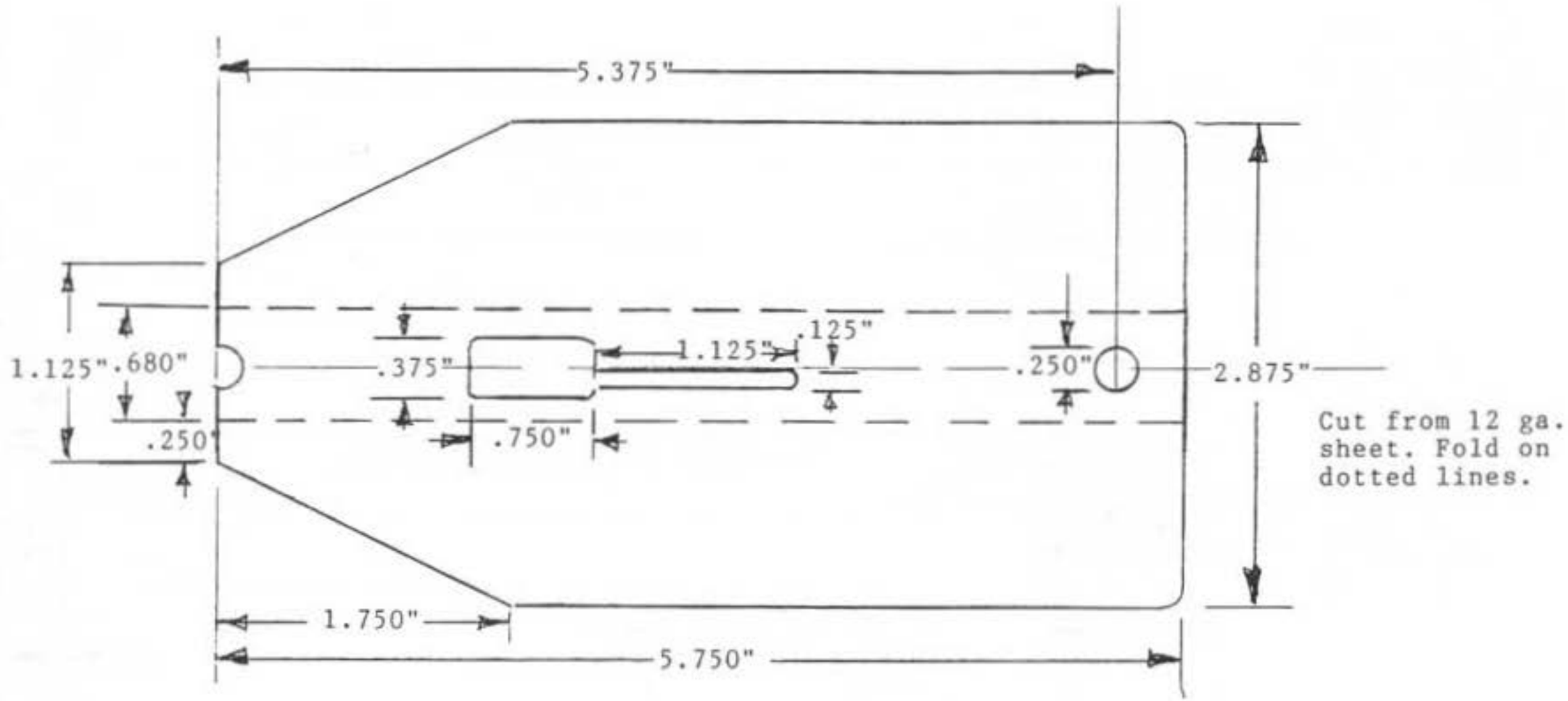

Trigger housing pattern.

Cut from 12 ga. Sheet, Folded To Shape

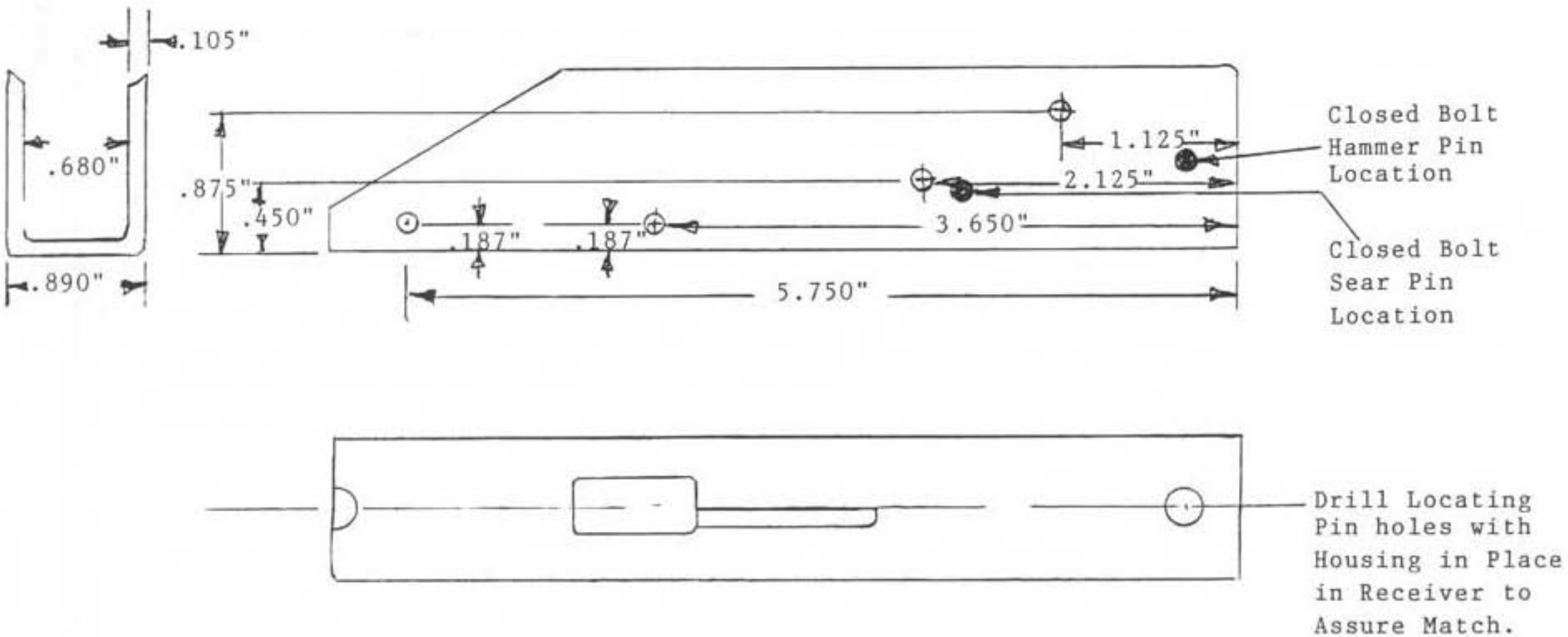

Trigger housing.

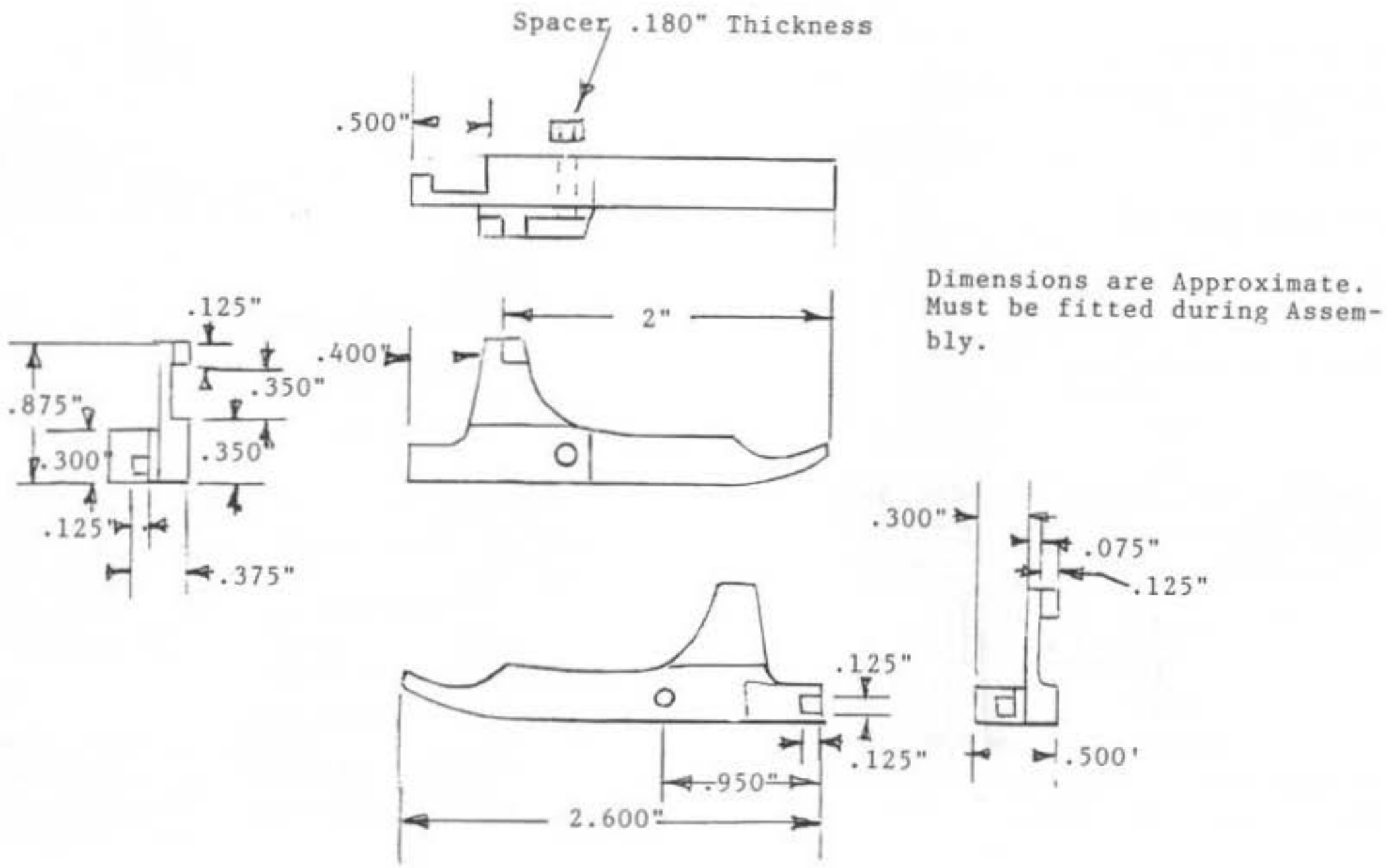

Dimensions are Approximate. Must be fitted during Assembly.

Closed-bolt sear.

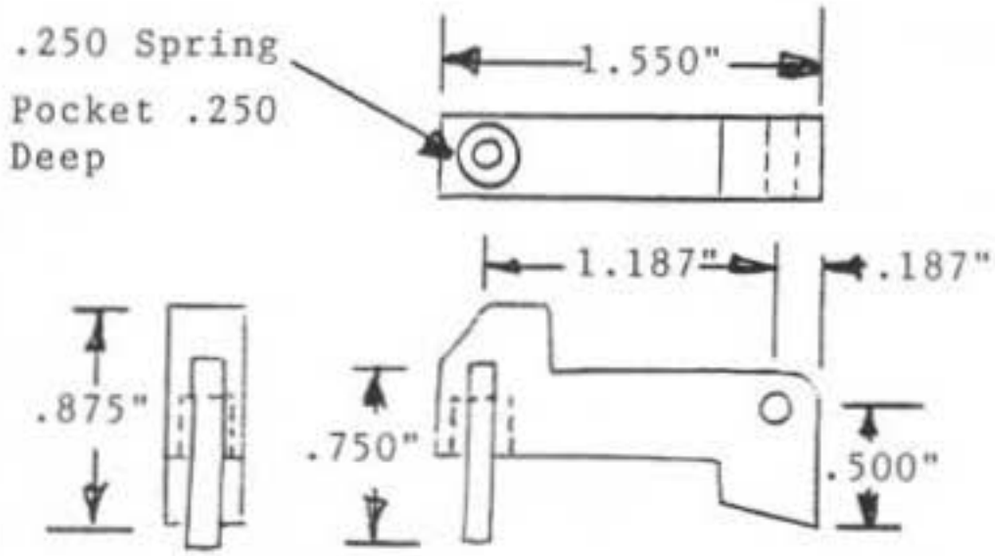

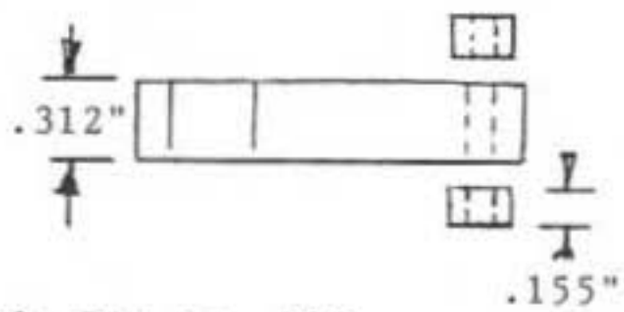

Spring Guide Pin is .125
Drill Rod pressed into
#31 hole.

SEAR

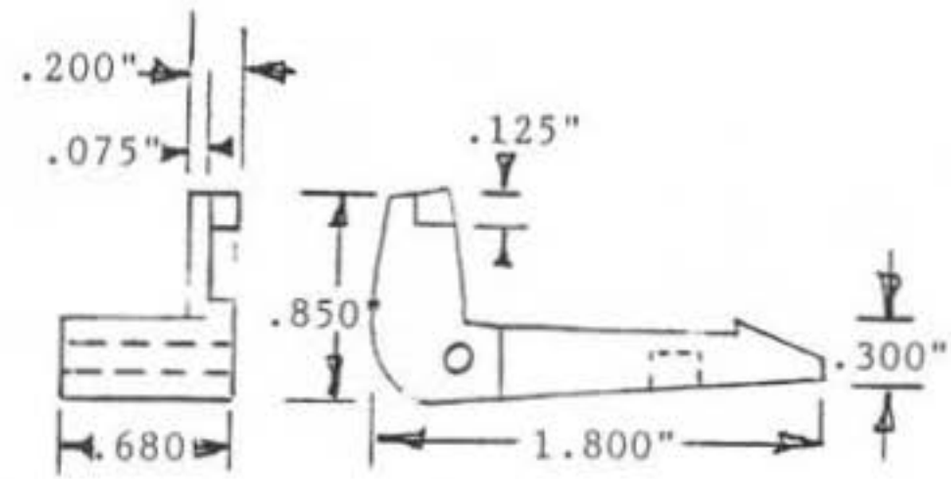

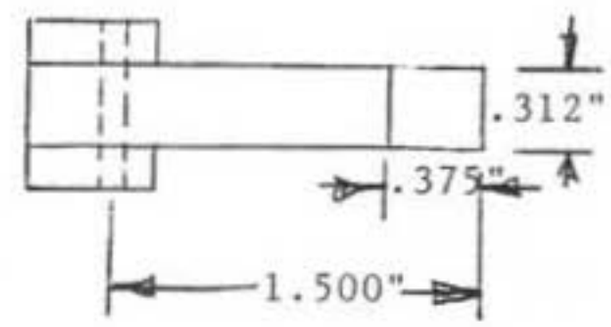

SEAR CATCH
Dimensions are Approximate.
Fitted During Assembly.

Open-bolt trigger components.

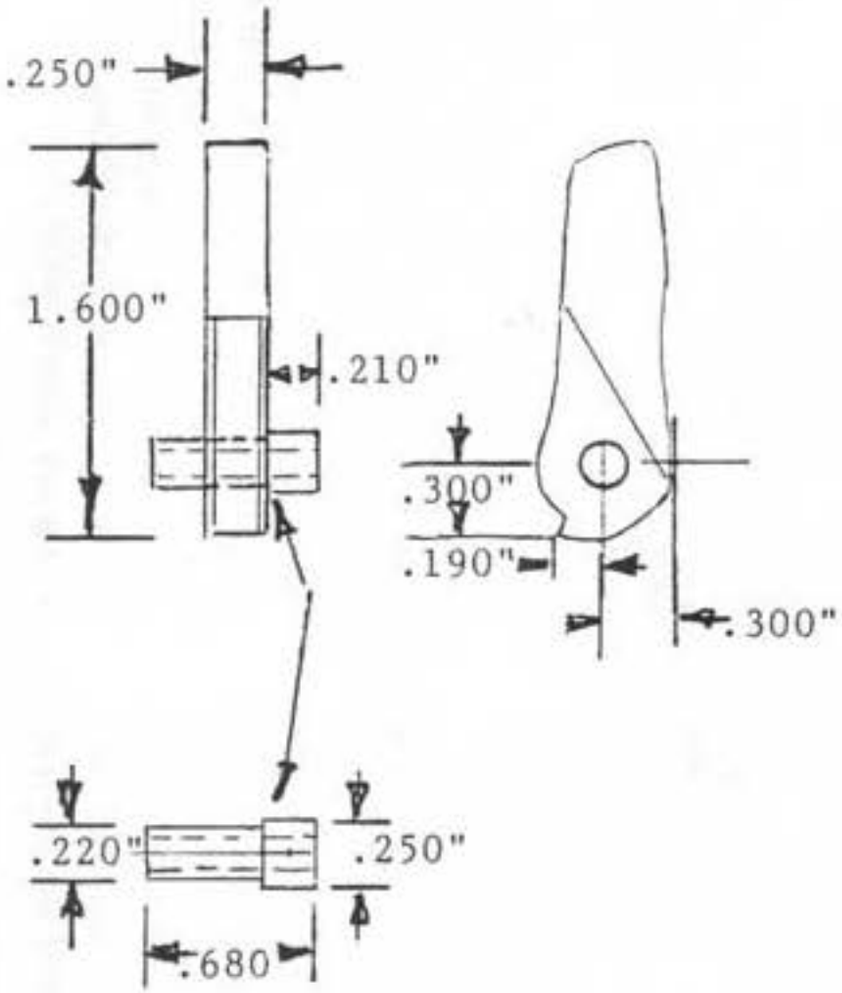

Hammer
Spacer is pressed into
.217" hole through Hammer
Use M16/AR15 hammer Spring.

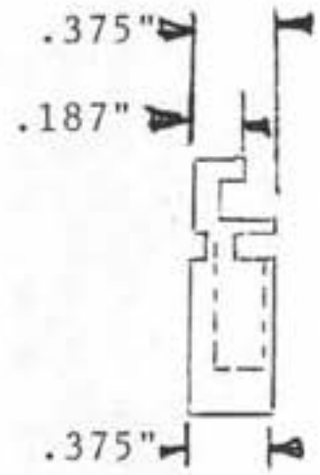

.187" Spring Pocket
.550" Deep. Detent
is turned to fit
inside Spring from
.187 Drill Rod.

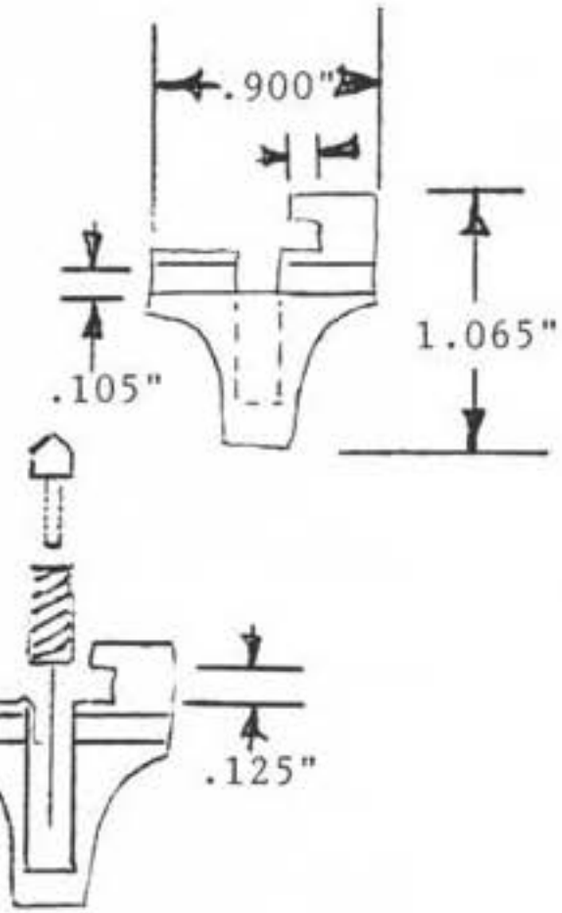

Safety
Dimensions are approximate.
Must be fitted during assembly.

Closed-bolt trigger components.

An end cap, or cover plate, is turned as shown and welded in place at the top rear. This area receives a considerable amount of jolting and pounding because the recoil spring bears against it and force is exerted against it each time the bolt travels to the rear. This is the reason for the built-up fillets along the lower sides. The extra length when welded in place reinforces and stiffens the joint. The upper half is cut away as shown, leaving only the thicker section at the rear. This enables the receiver to hinge upward when the grip bolt is removed, allowing bolt removal and access to the trigger assembly.

Both the upper and lower receivers should be clamped together and checked for proper fit. Assuming they fit together without gaps or cracks, drill and tap the front hinge bolt hole. This is done through both the upper and lower receivers at the same time, with both clamped together. Make the counterbore for the screw head at the same time. With the hinge screw in place holding the forward end together, drill and tap the grip screw hole. With the grip bolted in place, this forms a solid, sturdy assembly.

Although it would be easier to drill through the sides of the lower receiver for the various pivot pins required in the trigger mechanism, I designed this gun to use a separate trigger housing that contains all the trigger parts as a unit and is contained inside the lower receiver with no exposed pins. This will take a little bit of extra time, but it is time well spent since the pins are contained and cannot work out in use. It also has the advantage of interchangeability, allowing both the open- and closed-bolt assemblies to be used in the same frame.

Cut a blank for the trigger housing to size and bend it around a form block, just like we did before. This one is made from 12-gauge sheet and must fit closely inside the frame. Cut a slot for the trigger in the bottom, as well as a slot for the safety when the closed-bolt version is used. Matching clearance cuts must be made in the lower receiver to accommodate these. You should also drill holes for the pivot pins, using the locations shown in the drawings. If 1/8-inch pins are used, drill through both sides with a #31 drill. This is followed, through one side only, with a 1/8-inch drill. The smaller hole made by the #31 drill will grip the pivot pin and hold it in place. Hinge pin holes through the component parts should be drilled with a 3.20mm drill that is .126 inch in diameter to provide clearance, since a 1/8-inch pin will not revolve freely in a 1/8-inch hole.

The open-bolt trigger assembly uses a two-stage trigger pull instead of a selector switch. A short pull of the trigger fires single rounds only, because the disconnector disengages the trigger when the bolt, as it moves forward, cams it downward. Pulling the trigger further to the rear, against the stiff spring, causes the second notch on the trigger bar to bear against the sear lever, holding it out of engagement. This allows the bolt to reciprocate unimpeded, causing full automatic fire as long as the trigger is held back.

The sears, hammer, and sear lever should be made from 4140 or equivalent. Leaf-spring material can be used. These must be hard enough to prevent wear, but not so hard as to be brittle; 4140 hardened and the temper drawn at 800 degrees will be satisfactory for this.

The trigger bar should also be made from material that will heat-treat. You may have to mill or saw leaf-spring material to the thickness required to obtain it. Don't try to use common sheet metal for this. Triggers can be made from any available steel.

The trigger guard is simply a 1/2-inch or 5/8-inch-wide strip of 14-gauge sheet metal, bent to whatever shape suits you and welded or silver-soldered in place.

The sliding safety, as used in the closed-bolt gun, is made from 3/8-inch-thick material to the dimensions shown. When properly fitted, a flange at the forward end slides under the tail of the sear, locking it into the face of the hammer. The only way it would ever fire with the safety engaged would be to break it.

The open-bolt handle latches in the slot cut in the handle raceway. Here again, you would have to break it to allow it to fire when engaged. It would be a good idea to go ahead and cut the safety slot even when building the closed-bolt version, in which case it will serve as a bolt hold-open device.

If you choose to make both bolts and both trigger assemblies, they can be interchanged in the same frame and receiver, provided you cut sufficient clearance in the bottom of the receiver to clear both hammer and sear, as well as both disconnectors.

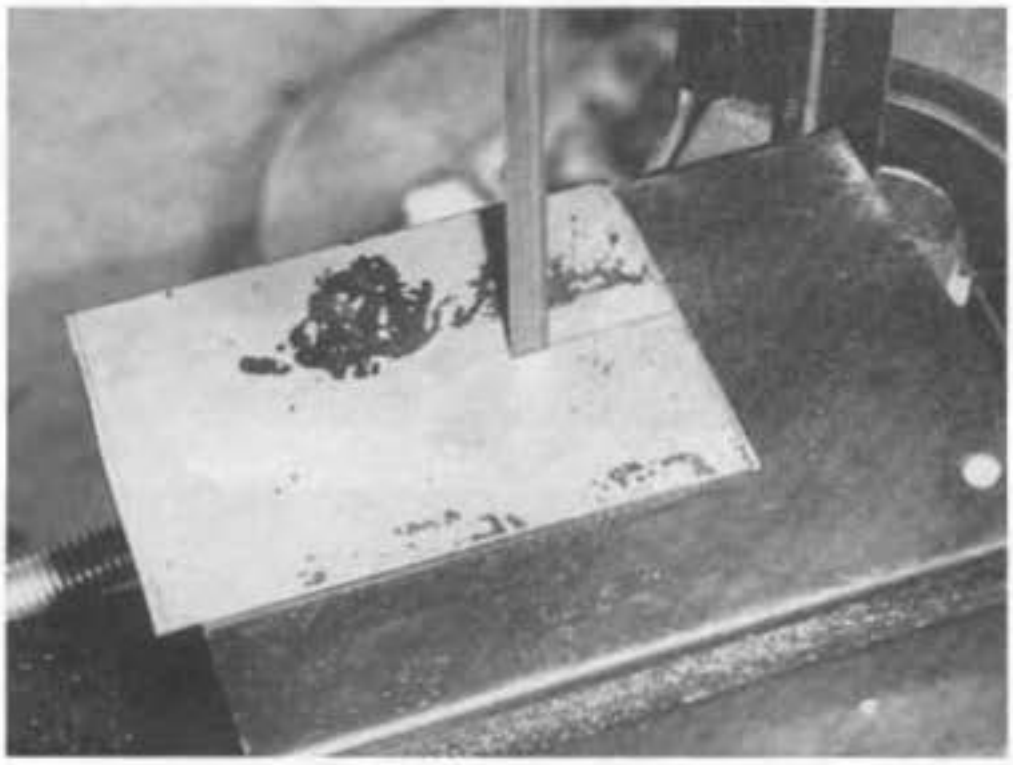

Left: Sheet-metal sides are cut using a band saw.

Below: Flanges can be formed in vise by using a heavy hammer and form blocks.

Below Left: Lower receiver blanks cut from sheet metal.

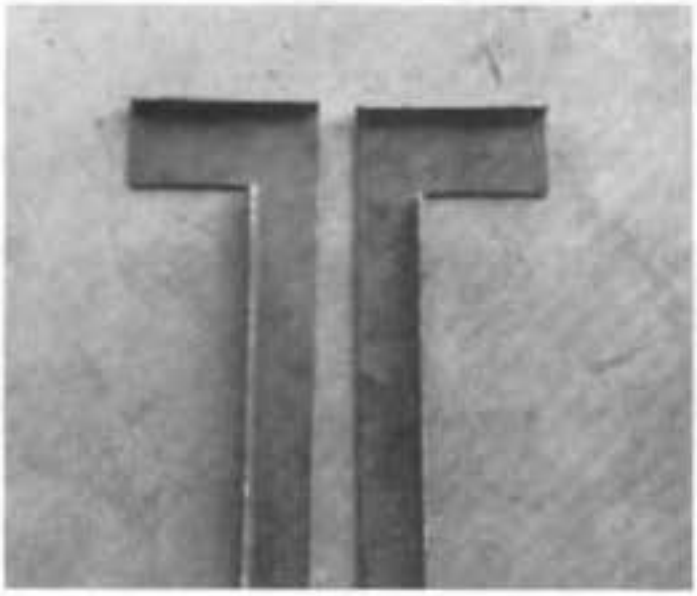

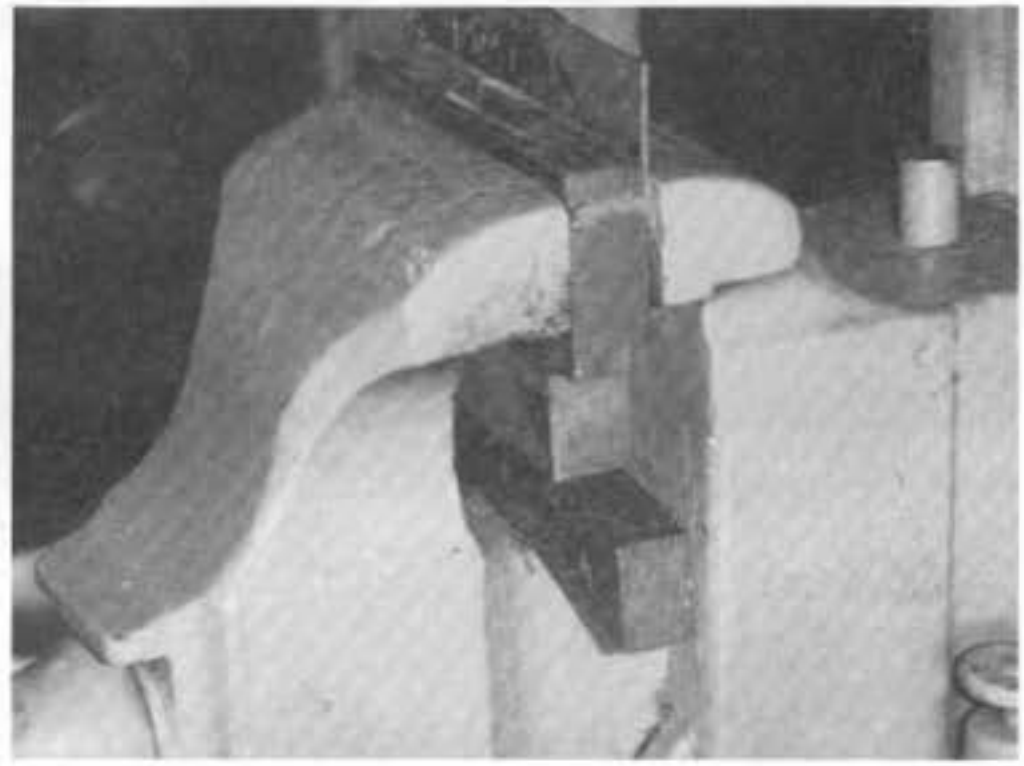

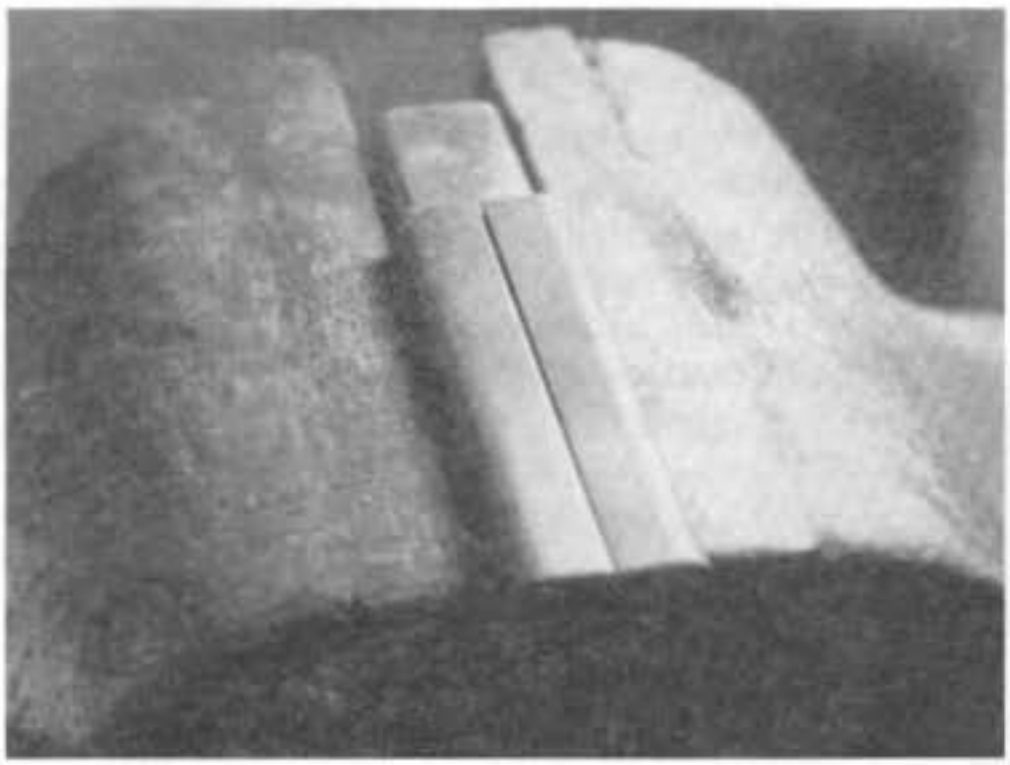

Left: Front face of lower receiver ready for welding.

Middle Left: Seam along lower side is also welded. Note that the filler block is in place while welding.

Middle Right: Rear end cap is welded in place in lower receiver.

Bottom: Welding is performed with TIG welder.

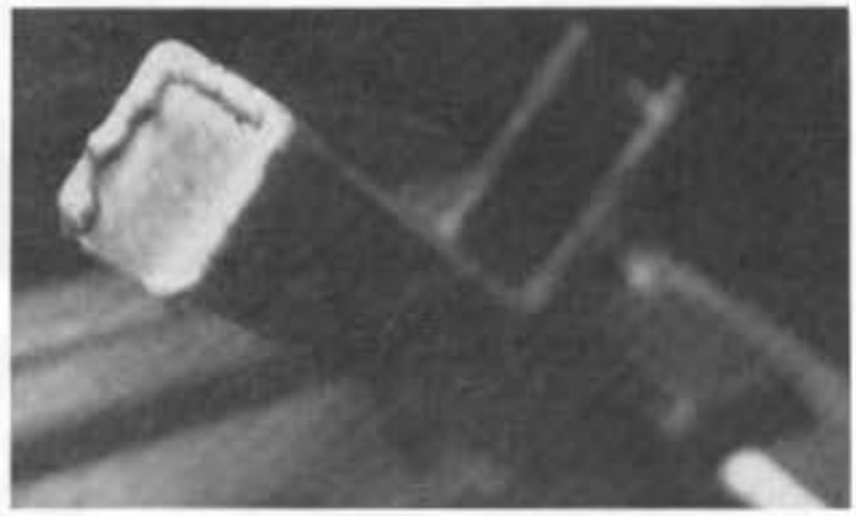

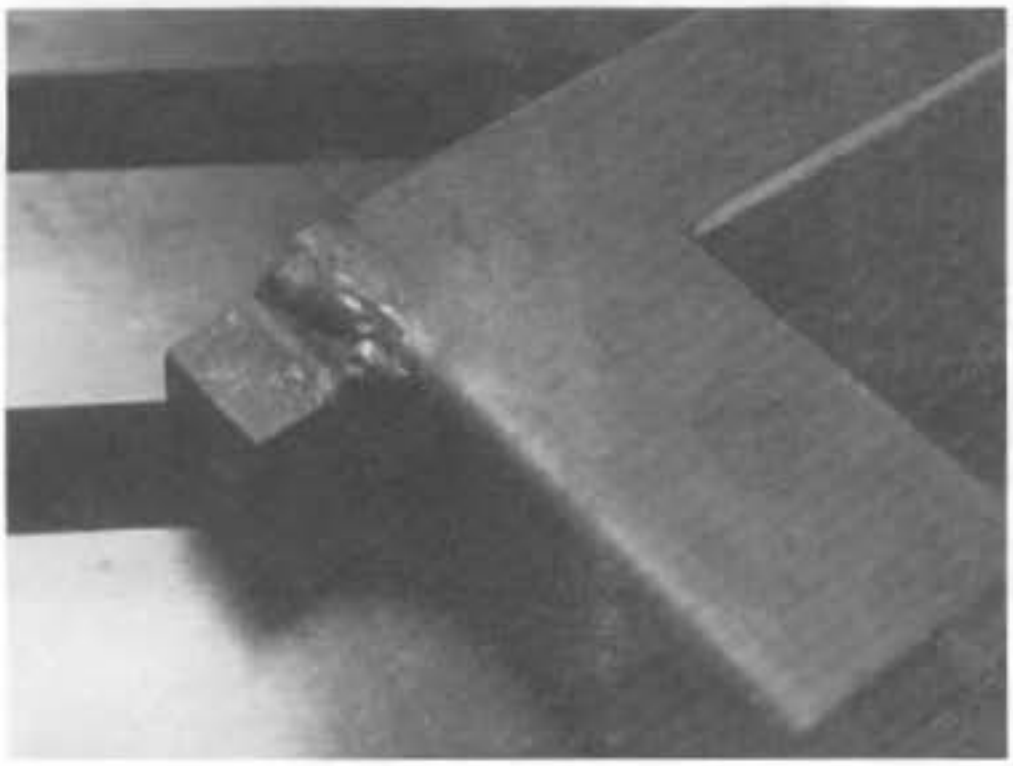

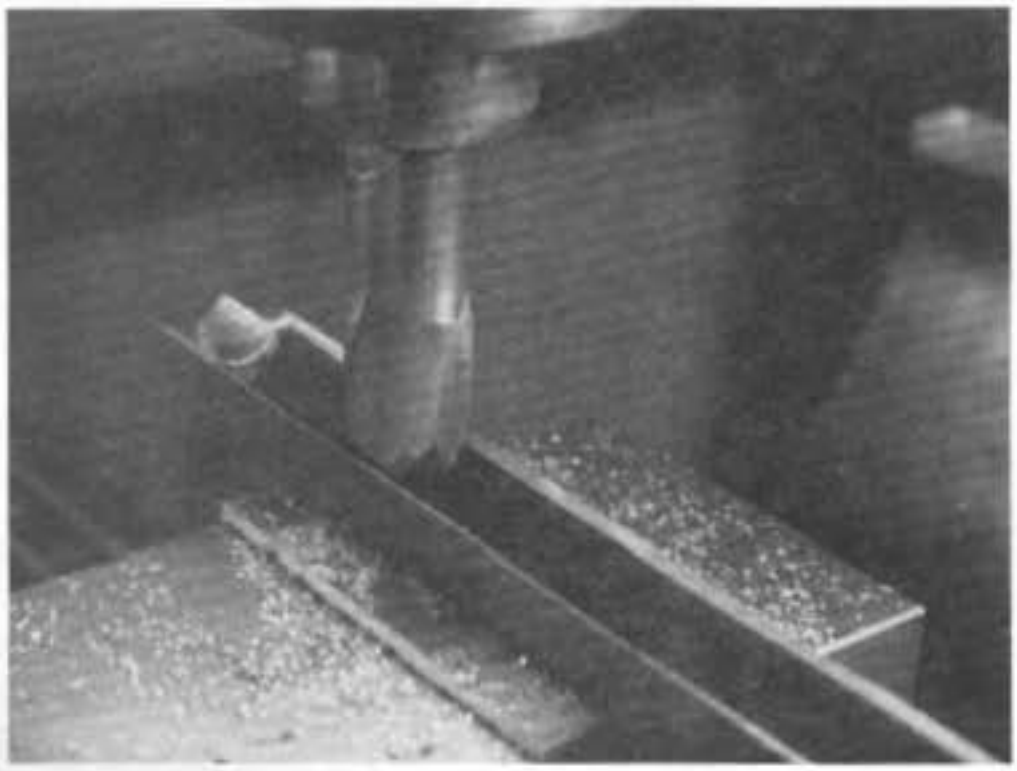

Above: Front hinge block is welded at the front of lower receiver. The weld should be built up to allow fillet to be formed.

Right: Receiver is contoured to mate with upper by using ball cutter.

Below: End cap is fitted and welded in place.

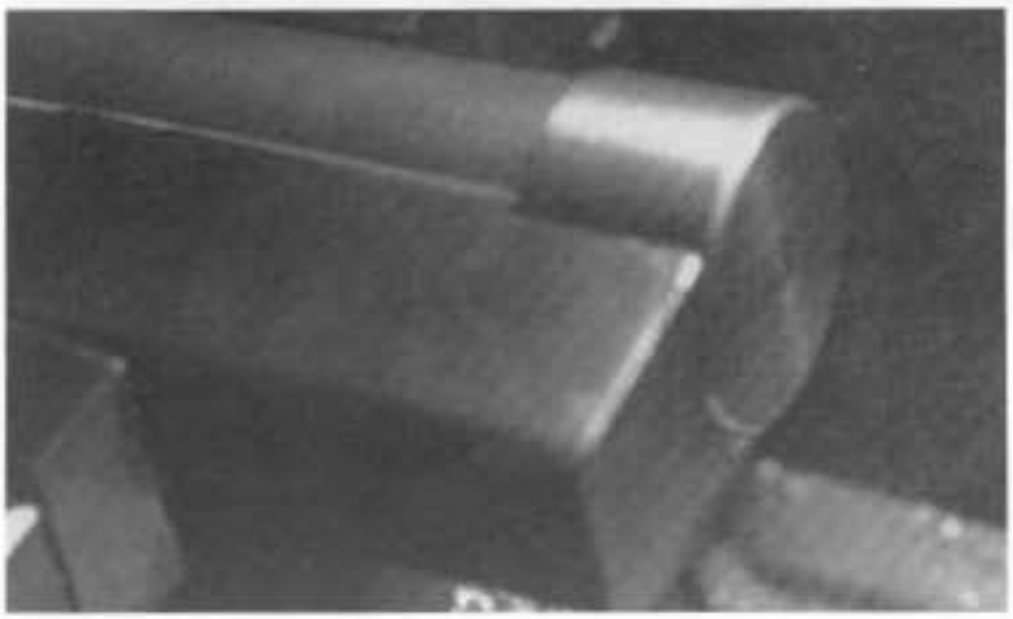

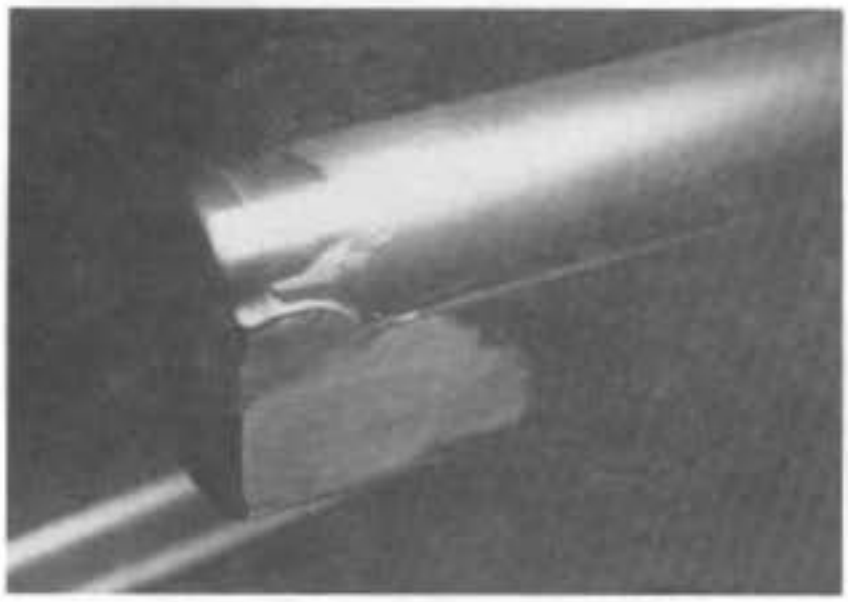

Grind welded joint, file smooth, and cut upper portion away to allow receiver to hinge upward.

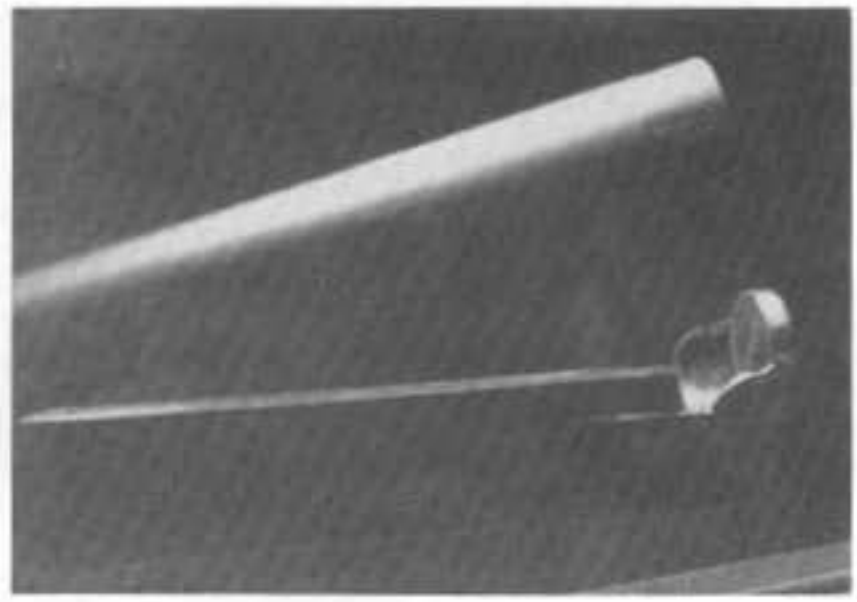

Ready for final finishing.

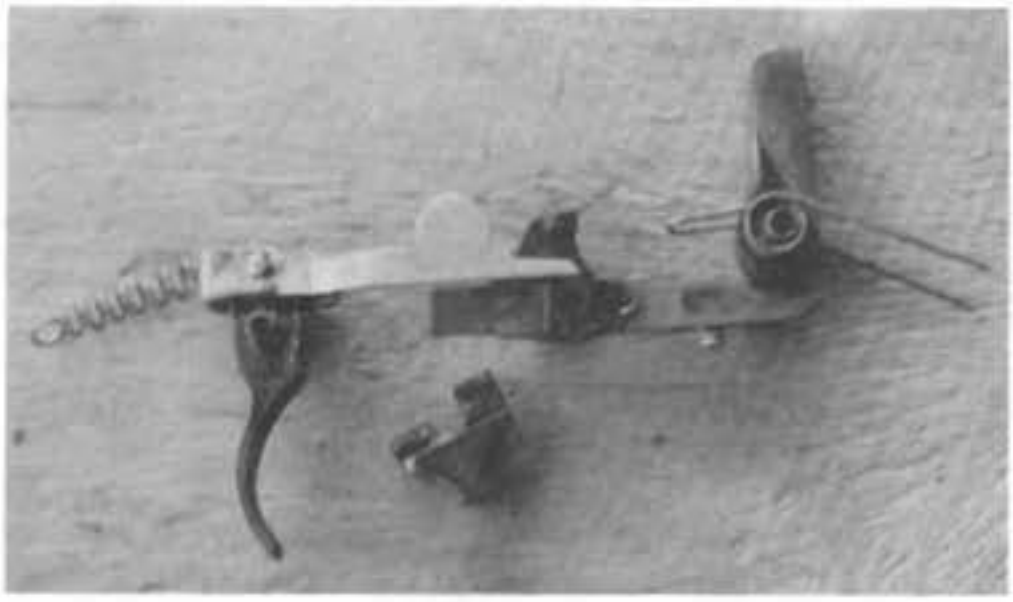

Left: Closed-bolt trigger assembly consists of trigger, trigger bar and spring, sear, hammer, and safety.

Below: Component parts for closed-bolt trigger assembly fit inside removable housing. This is interchangeable with open-bolt assembly.

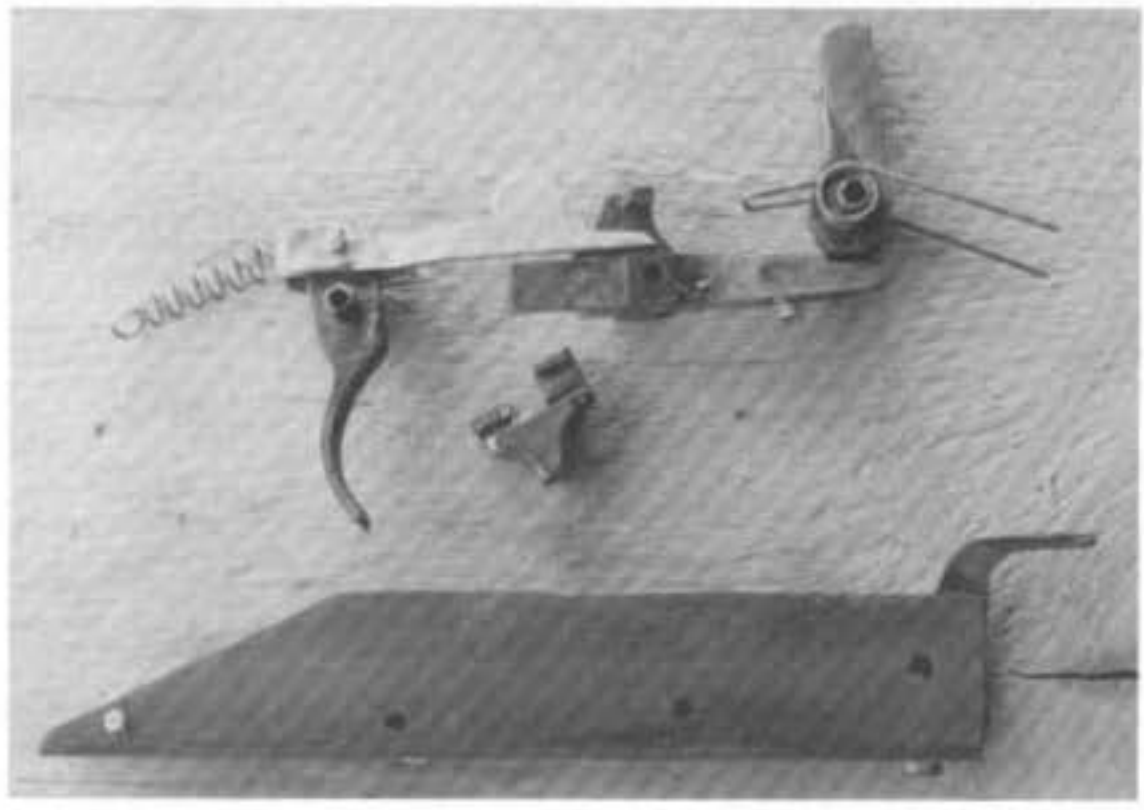

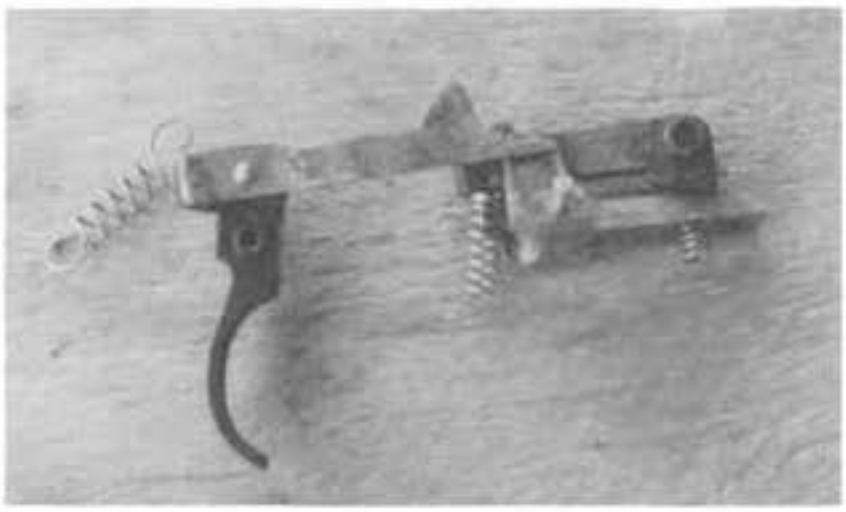

Left: Open-bolt trigger assembly, shown as assembled.

Below Left: Hammer uses M16/AR15 hammer spring.

Below Right: Parts, when assembled, make up an interchangeable assembly.

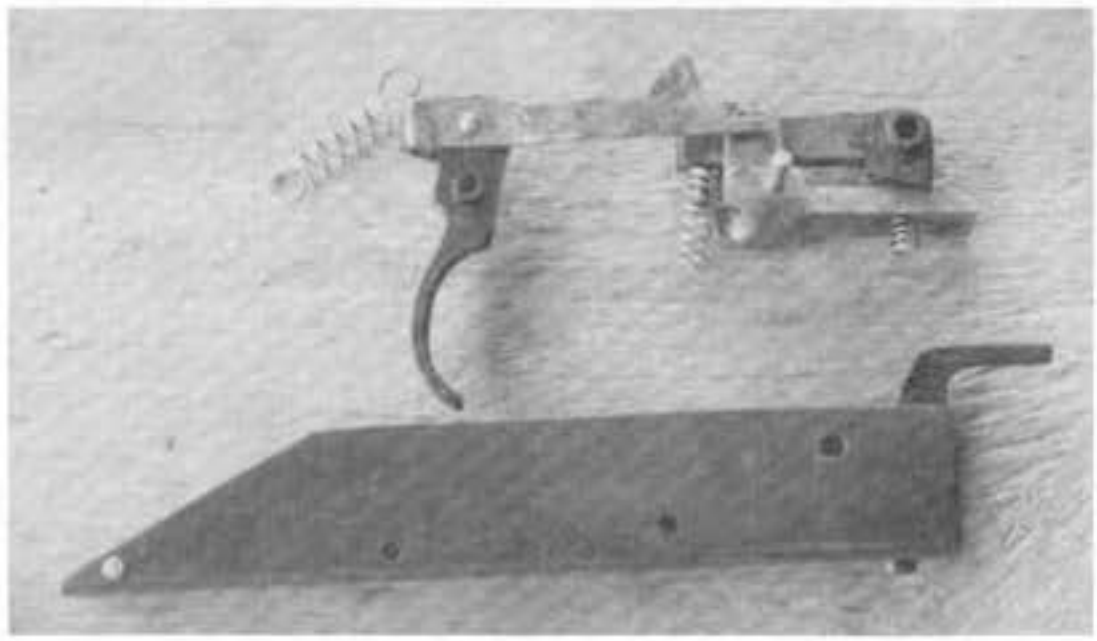

Top Left: Sear as used with the above hammer.

Bottom Left: Safety as used with the above.

Right: Closed-bolt trigger with trigger bar and spring in place.

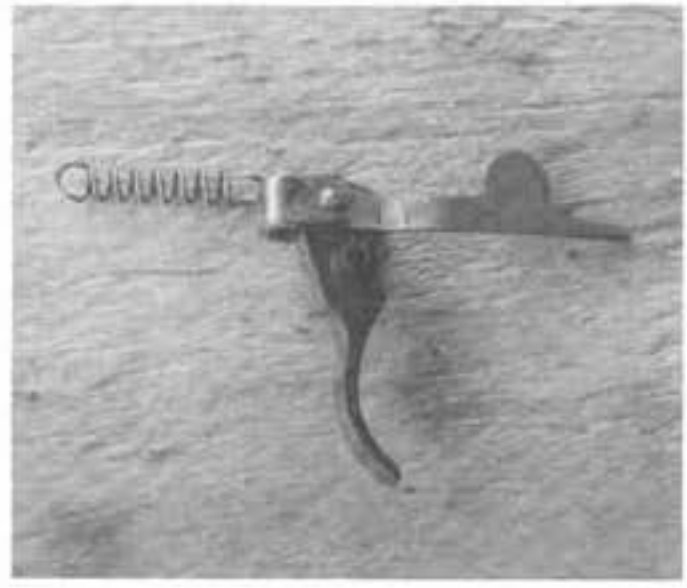

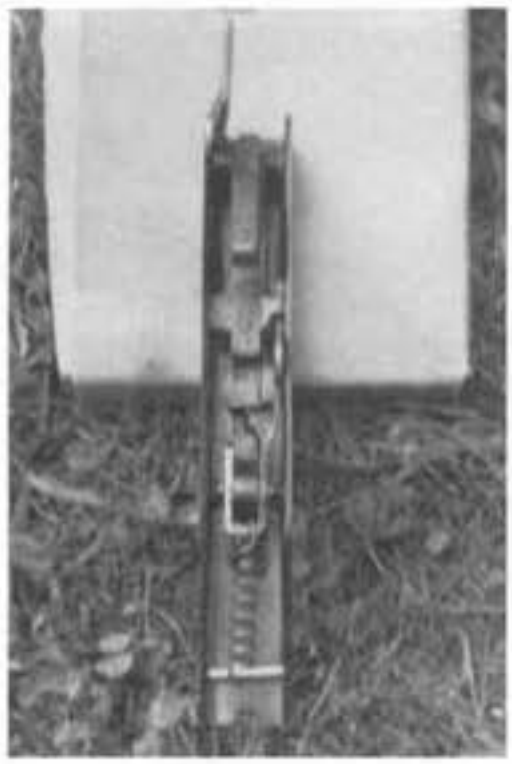

Far Left: Top view of closed-bolt assembly.

Left: Top view of open-bolt assembly.

Right: Closed-bolt trigger assembly (left) and open-bolt assembly as viewed from top.

Far Right: Bottom view of same.

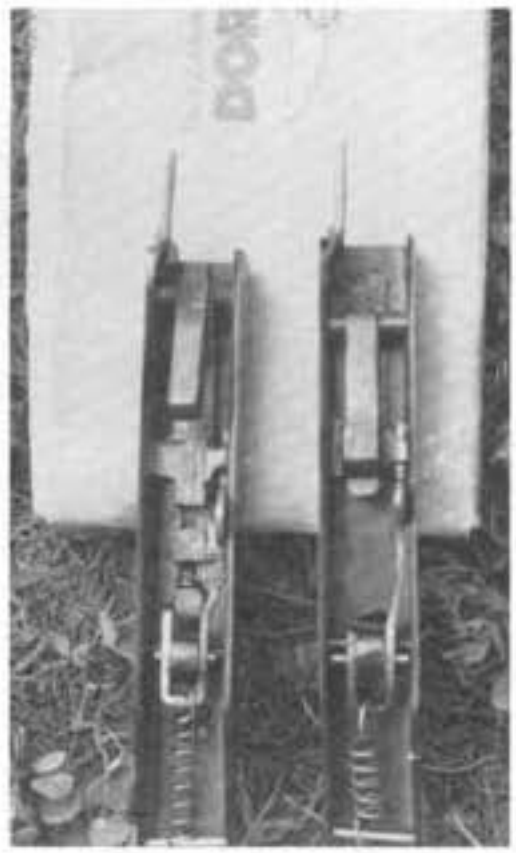

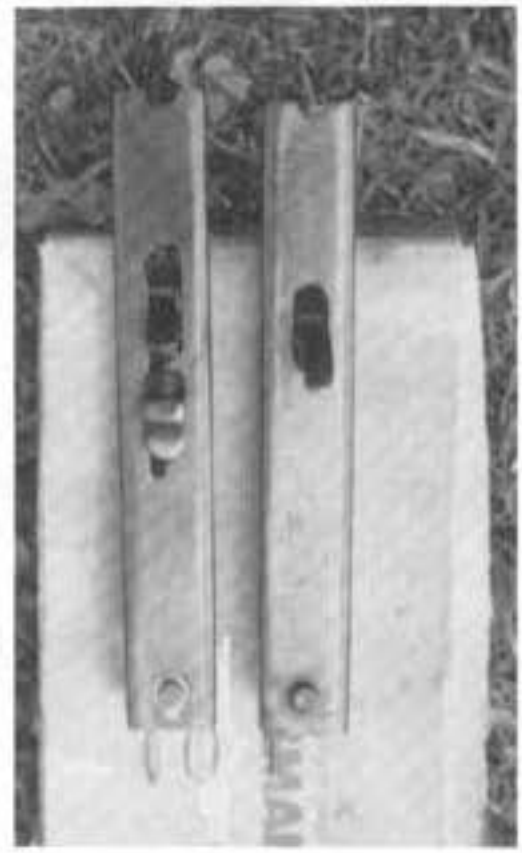

CHAPTER

7

Grip and Barrel Shroud

The pistol grip can be made from any close-grained hardwood, including walnut, cherry, myrtle, maple, and numerous others. Use a piece that is fairly straight grained, and avoid brittle wood that will split or crack easily. The grip blank should be at least 1 1/2 inches thick, 3 inches wide, and 4 1/2 inches long.

Drill a hole, 1/4 inch in diameter, lengthwise through the grip blank. This is located 1 3/4 inches back from the top front edge and centered in the width of the blank. It is important that this hole be perpendicular to the top side, so take care to make it so. The hole is counterbored to a depth of 1 inch at the bottom to accept the bolt bead.

The bolt, 4 1/2 inches long and 1/4 inch in diameter with 28 threads per inch, is available at most hardware stores. It will require a screwdriver slot cut across the head. This can be done with a hacksaw or hand grinder. Insert the bolt and attach the grip to the frame. If the trigger guard is already in place it will be necessary to inlet the rear side into the wood using a narrow wood chisel. A channel, or slot, should be formed at the top to allow the grip to extend up over the sides of the lower receiver. This can be done with the milling machine, using a 3/8-inch ball cutter to form the radius at each side. It can also be done by carefully marking the outline and making parallel saw cuts to the required depth, as close together as possible. Whatever surplus wood remains can be removed with rasps or files and a sharp wood chisel. This slotted portion should conform closely to the contour of the frame.

By giving the metal parts a thin coating of lipstick or other nondrying marking material and pushing them as far as they will go into the wood, you can easily detect high spots to be removed through traces of the marking compound imprinted on the wood. Work slowly, removing only a little wood between each fitting, until the parts fit closely together with as little gap between the wood and metal as possible.

The outside should now be shaped similarly to the contour shown in the drawing and pictures, or until it feels comfortable in your hand. The shaping is easily done using a sanding wheel, as shown

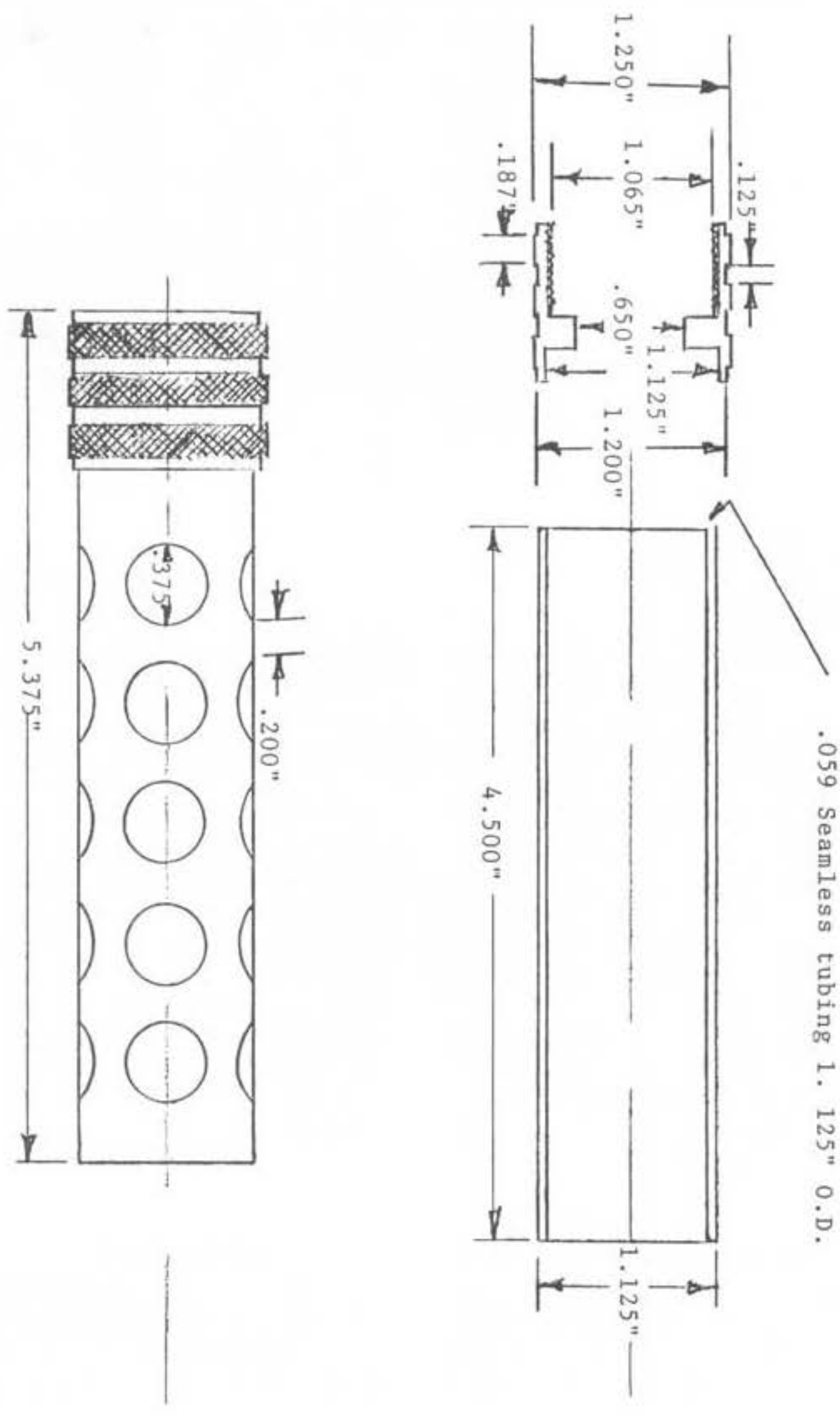

Barrel shroud.

Grip.

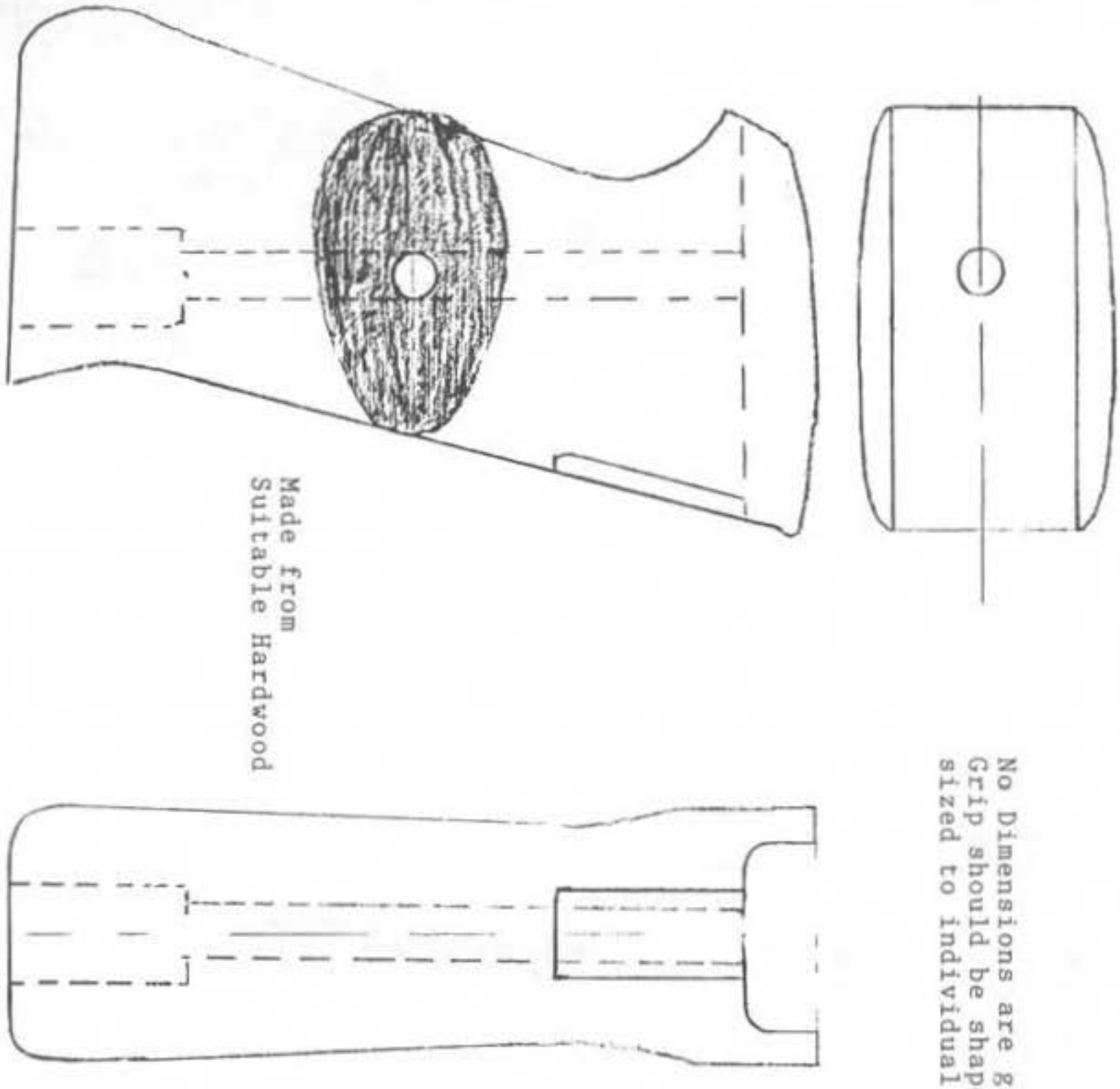

No Dimensions are given.
Grip should be shaped and
sized to individual taste.

in Chapter 1, with final finish shaping done with rasps and files. Note that in the photographs, two different guns are shown, each with a slightly different grip style and finish. The grip you make should suit and fit you; it need not be anywhere near the shape or size of the ones shown. When shaped to suit you, sand it smooth. Begin with coarse-grit sandpaper, follow with progressively finer grits, and finish with 400-grit paper. After the sanding is completed, apply a finish of whatever type suits you. I suggest that you use a waterproof finish. If you have no special preference, try brushing on several coats of Flecto-Varathane.

When the last coat is thoroughly dry, sand it back almost to the surface of the wood. This was simply used as a filler. Several coats of a finish such as Tru-Oil or Linspeed can now be added, providing an extremely durable and waterproof finish.

In certain instances it is desirable to apply several coats of black paint instead of the clear finish described above. One of the grips pictured has such a finish. This is usually done to simulate a plastic grip or, when used in conjunction with a bead or sand-blast finish on the metal parts, to simulate a military-type "nonglare" finish.

The barrel-retaining nut is made from 1 1/4-inch round stock. It is bored and threaded to screw on to the front threaded end of the receiver and serves to hold the barrel in place. Three narrow bands should be formed and knurled around the outside circumference both for appearance and to provide a secure grip when hand tightening or loosening the nut.

Bore the forward end of the nut to a diameter of 1 1/8 inches and to a depth of 1/4 inch, leaving a thin web that should be bored slightly larger than the barrel diameter. This bears against the barrel flange and holds the barrel in place inside the receiver.

A section of steel tubing, 1 1/8 inches in outside diameter and 4 1/4 inches long, is used for the barrel shroud. Since there is no strength requirement, the tubing can be of any grade of material available. It should be fairly thin-walled to save weight.

Many times, tubing salvaged from automobile shock absorbers is satisfactory for this. Insert one end of the tubing into the front end of the barrel nut and silver solder or weld in place, thus forming the barrel shroud.

A series of holes to "ventilate" the barrel shroud should be drilled around the circumference and along the length of it. Though these are mainly for appearance, they do serve to reduce weight and might actually contribute to cooling the barrel by increasing air circulation around it. The holes can be of whatever diameter and laid out in whatever pattern you choose. The prototype gun had four rows of equally spaced 3/8-inch-diameter holes, spaced .200 inch apart, beginning 1/2 inch forward from the face of the barrel nut.

Boring and threading the barrel-retaining nut.

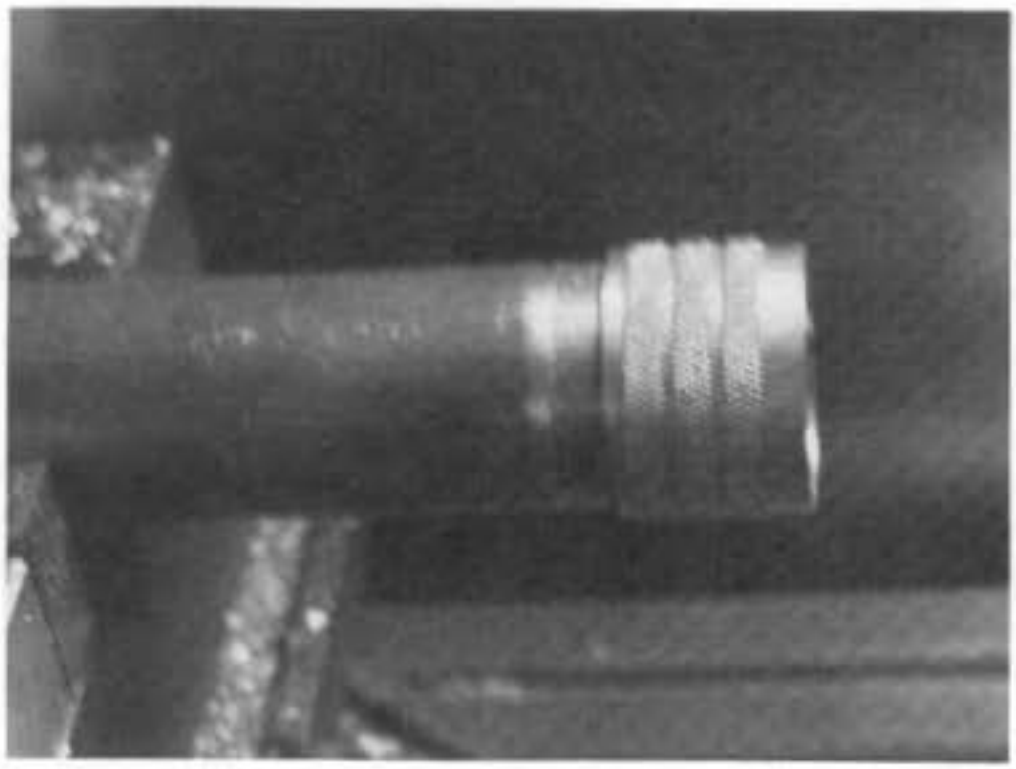

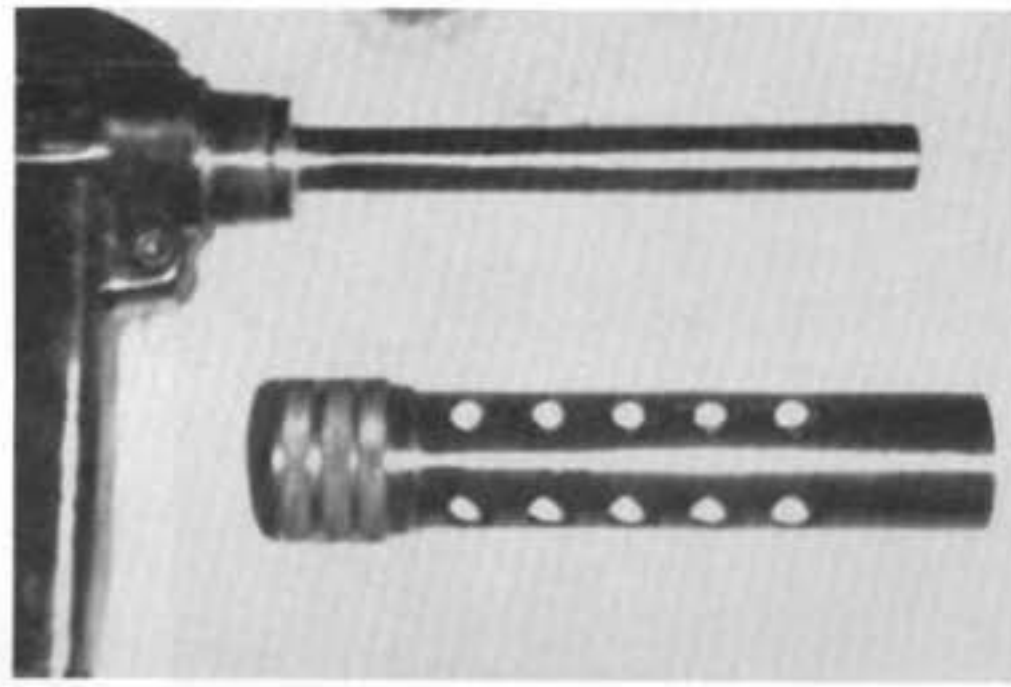

Above: Completed barrel-retaining nut.

Right: Completed barrel shroud.

Below: Barrel shroud in place.

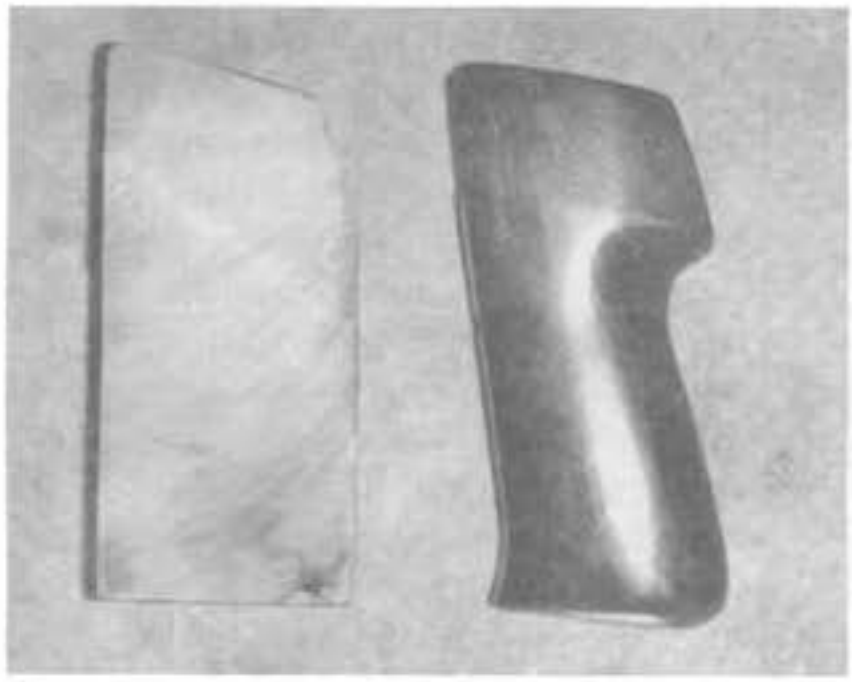

Grip blank, shown with finished grip.

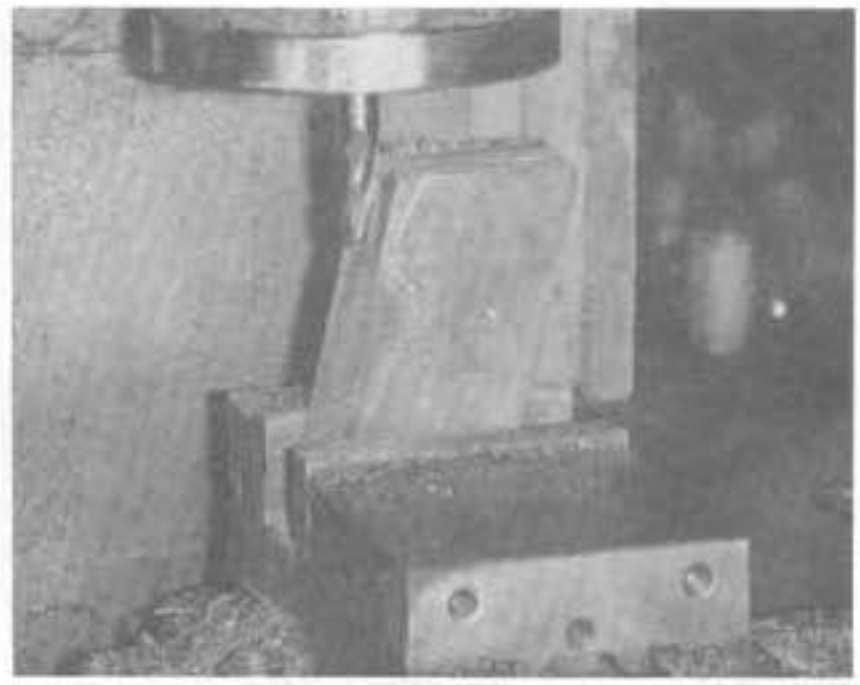

Cut frame slot with end mill.

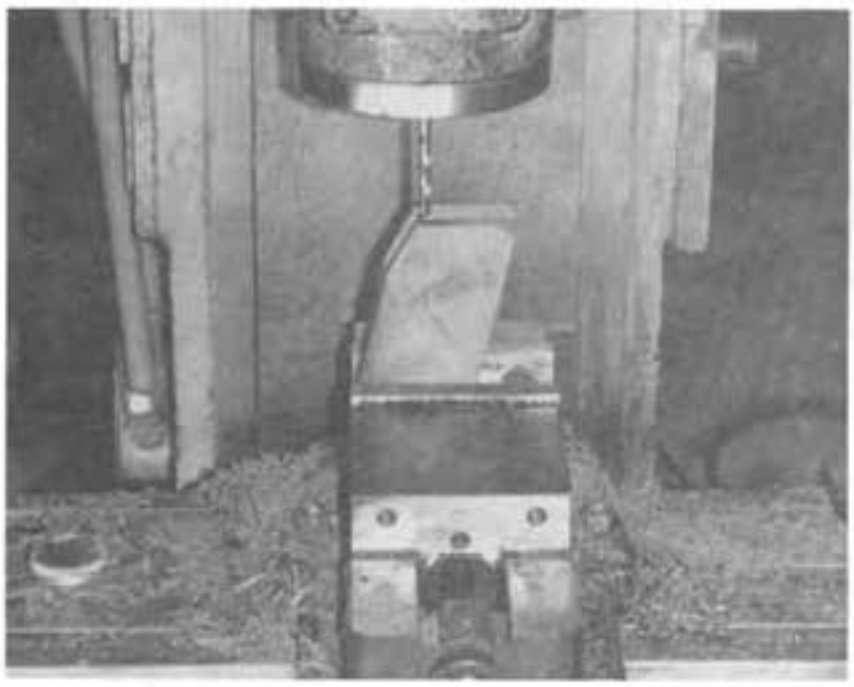

Drill bolt hole using same setup.

Grip can be shaped almost to final contour using disc sander.

Left: Ready for final sanding and finishing.

Right: Grip with mounting bolt in place.

Grip mounted on gun.

CHAPTER

8

Sights

Since I built the first version of this gun nearly 20 years ago, I have gained quite a bit of experience and learned a great deal concerning firearms of this type. One of the things I learned over the years is that elaborate sights are not really necessary or even desirable. The gun pictured and described here has only a simple blade front sight and a fixed, notched rear sight. When aligned and cut to the correct heights, these are adequate for their intended use.

Bases, with protective ears, for these sights can be milled or sawed and filed from solid blocks. They can also be formed from sheet metal rather easily, using a heavy hammer and simple form blocks.

A simple form block, which can be used to form both front and rear bases, is made by machining a radius to match the contour of the receiver plus the thickness of the material used, on the lower side of the block. A radius of 11/16 inch will be right for this. The block should be .625 inch wide and 1 inch long. This will form the inside of the sight bases. Use a short length of 1 1/4-inch round stock to form the concave portion that adjoins the receiver. It is helpful to drill two 3/16-inch-diameter holes, one located near each end, from the top and completely through the form block. These should also extend partway through the round lower form block. Locating pins inserted in these holes hold the assembly together and keep it aligned while in use.

Cut blanks, as shown in the drawing, from 14-gauge sheet metal with holes drilled to correspond to the locator pin holes. Then, with the locating pins in place, sandwich the blank between the die parts and clamp the assembly in the vise. Pressure from the vise jaws will form the radiused bottom portion. Then form the sides using a block and hammer.

Cut a lengthwise slot in one base to accept the front sight blade, which is cut from 1/8-inch-thick material, and crosswise through the other for the rear sight cross piece. The sight blades are fluxed and located in place, whereupon both assemblies are silver-soldered in place on the upper receiver, securing both the sight blades and bases at the same time. Both sights can be kept in

Bases formed from 16ga. sheet

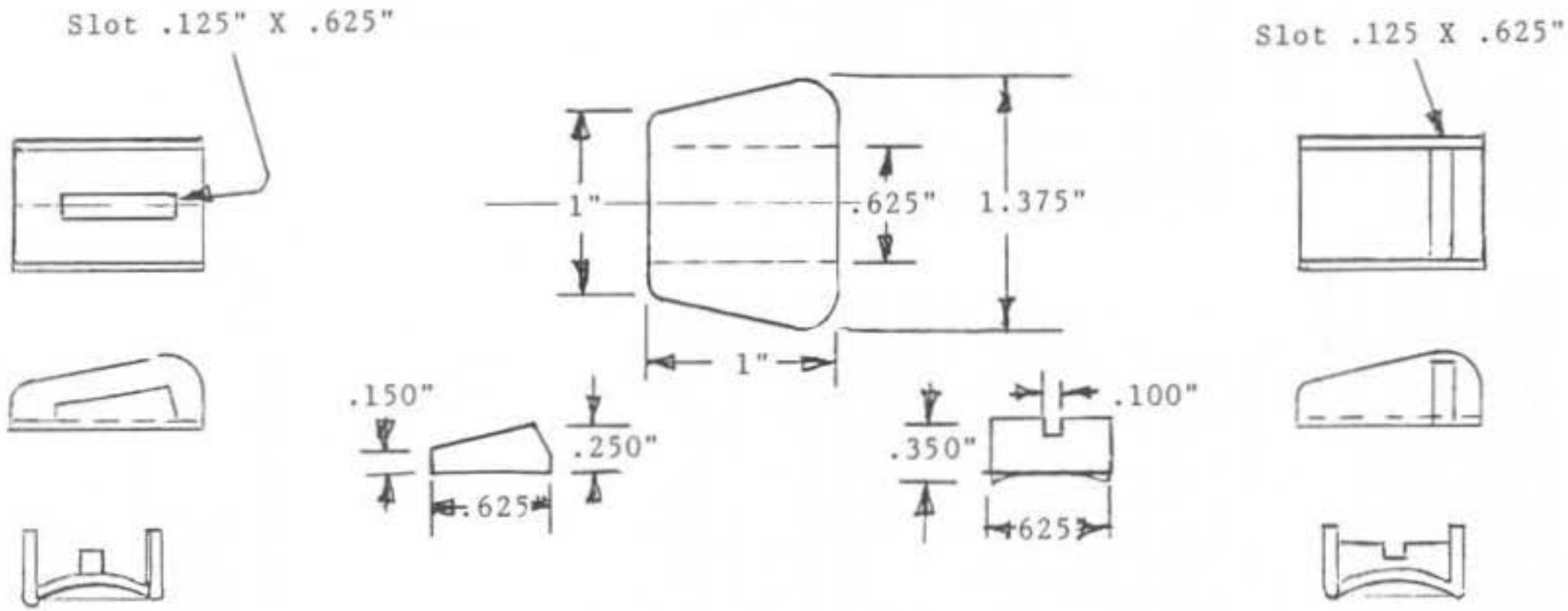

Front and rear sights.

longitudinal alignment during installation by placing a piece of 5/8-inch-wide material between the sight ears and the top of the blades and clamping it tight while the silver-soldering operation is performed.

If you must have adjustable sights, *Vol. I* contains instructions for building a rear sight suitable for this purpose. It is also possible to replace the rear sight cross piece with a Williams "Guide" adjustable sight or a similar one made by Marble.

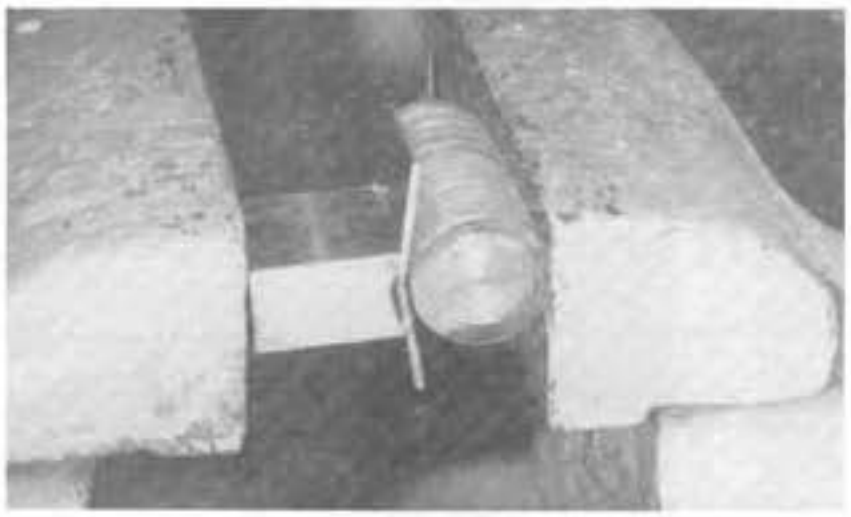

Left: Clamp form die, with blank in place, in vise.

Left: When pressure is applied, radius is formed.

Top: Form dies, with sight base blanks.

Above: Blank in place over locating pins.

Right: With support blocks in place on lower side, flange is formed using block and hammer.

Far Right: Turn the assembly over and form the other side.

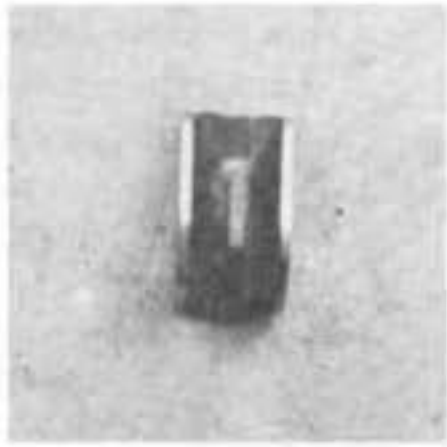

Top Left: Front sight base with blade.

Top Right: Front sight assembled.

Lower Left: Formed rear sight base with leaf.

Lower Right: Rear sight assembled.

Right: Bottom view of the assembled sights, showing soldered joint.

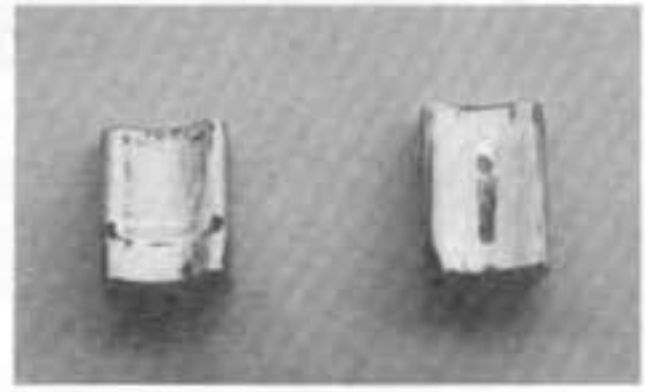

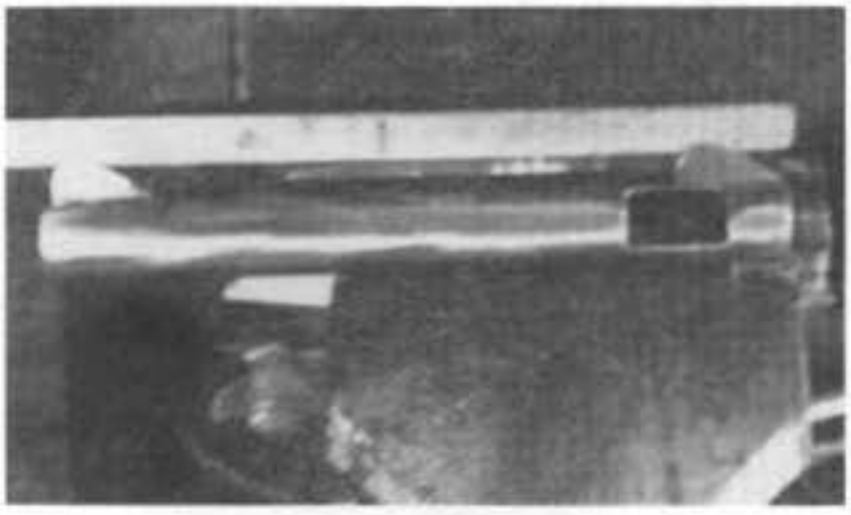

Keep sights in alignment during installation by using square stock that fits closely inside bases.

Sights installed using silver solder.

CHAPTER

9

Magazine Manufacture

This gun was designed to incorporate magazines built originally for use in the British "Sten" gun. These are readily available, cheap, and, most importantly, sturdy. These are presently advertised at $3 new and $2 used, which is less than it would cost to wind the spring. Purchasers of new magazines are given a choice of a "blue" finish, which means they are painted black, or a "parkerized" finish, which means they are painted gray. Even so, they represent a bargain. I suggest you obtain a few extra.

It was my intention when I started this book to give a brief description of these magazines and let it go at that. Recycling material printed in another book is similar to selling the same thing twice, a practice that should be frowned upon. However, just recently members of Congress have introduced legislation connected to their so-called "Crime Bill" that would actually ban the sale or possession of high-capacity magazines such as these. Therefore, I believe it is desirable that the material published in *Vol. I* be reused here. If you think you are getting shortchanged, please forgive me.

To make a magazine of approximately the dimensions and capacity as the Sten, a piece of 20- or 21-gauge sheet steel, 5 inches wide and 10 inches long will be needed. The 20-gauge material is .036 inch thick while the 21-gauge measures .031 inch in thickness. If the double thickness is used in the upper portion, an additional section, 3 inches by 3 1/2 inches, will be required, as well as a piece 1 1/4 by 1 5/8 inches for the bottom cap, or floorplate. Obtain this material with a cold finish (bright metal) if possible because it is far easier to polish for final finishing than the black "hot-rolled" material.

A female forming die should be made with a U-shaped, flat-bottomed cross section formed by bolting, riveting, or welding two lengths of 1/2-inch, or thicker, steel to a center section of the same material that is cut to a width of .835 inches. The sides should be 1 1/2 inches high, measured from the inside bottom section. The length should be at least 12 inches. Slightly bevel or chamfer the inner edges of the top walls, and pol-

ish them as smooth as possible. This will permit the sheet metal being formed to enter the die with as little friction as possible. If only a few magazines will be made, angle iron can be used to make this forming die, provided that another piece is welded across each end to prevent it from spreading open.

A male die must be made to fit exactly the opening in the female die—less double the thickness of the material being formed plus another .005 to .010 inches for clearance. This simply means that if the opening in the female die is .835 inch and you are using 20-gauge sheet metal, you add .036 inch plus .036 inch plus .005 inch (or whatever clearance you deem proper), which totals .077 inch. This figure, when subtracted from .835 inch , leaves .758 inch. Therefore, the male die should be .758 inch wide. A double thickness of .072 inch is also subtracted from the 1.500 inches depth, resulting in an overall depth of 1.428 inches.

Cut a longitudinal slot, 5/16 inch wide and 1/4 inch deep, in the top or back side of this male die. It should have a round, radiused bottom. This can be cut with a ball-ended milling cutter or round files. In addition, all four corners should be slightly rounded.

Insert the male die inside the female die with a shim of sheet metal on each side. These shims should be the same thickness as the magazine material to keep the male die centered. Then drill a 3/8-inch hole at each end, close enough to the ends to allow room for the 10-inch magazine to be formed between them. The holes should be drilled through both the female and male dies simultaneously, while they are together. A close-fitting guide pin should be used in each of these holes to keep the dies in line while the magazine is being formed. If the dies are to be used a number of times, you should press a slightly oversized pin into each end of the female die and ream the holes in the male die to slip-fit over them. If you only plan to use the dies a few times, floating pins will suffice.

After applying a light coat of grease, center the sheet-metal blank across the top of the female die. Put the male die, also lightly lubricated, in place on top of the sheet metal blank, and squeeze the entire assembly together either in a press or large vise. You can also force it together by wrapping a chain around the dies and another bar of metal, leaving enough space between for a hydraulic jack. The jack will force the dies together, forming the sheet metal into the shape of the magazine. Either method will form the front and both sides of the magazine body.

Now, you must form the back side. After placing a bar of steel along the side of the sheet metal protruding from the top of the die, tap it with a hammer, bending it in toward the middle. Do this on both sides. Then form a 3/16-inch ridge lengthwise on a flat steel bar by grinding a 3/16-inch-diameter rod to half thickness. Braze or rivet this rod to the plate. To complete the outside form, place the plate, with rod attached, over the top of the die and press them together. Then remove the formed magazine body from the female die and push the male die out from one end. The seam should be soldered, brazed, or riveted together, after which the lips should be cut to shape and bent inward, as shown.

The reinforcing section is made in the same manner, except that it only has three sides, with the front left open. When formed to the proper shape, with the lips cut to shape and bent inward, it is placed over the magazine body and welded or silver-soldered in place.

The edges at the bottom sides must be flared at right angles, outward from the magazine body, leaving a 1/16-inch lip projecting from each side. The bottom plate will slide onto these lips. This can be done with a hammer and a flat bar of steel, but the male die should be placed back inside the magazine while these are formed to prevent it from being bent out of shape. Clamp a flat plate to the side, flush with the bottom of the angle. Holding the flat bar against the bottom, make the bend while tapping it with a hammer.

The bottom plate is made to the dimensions shown (it should just slip over the flanges at the bottom of the magazine) by bending to shape or forming in a small die. After it is shaped, drill a 3/16-inch hole somewhere close to the center and make a matching keeper by drilling a corresponding hole through a strip of sheet metal that is sized to fit inside the magazine body. A short locating pin is silver-soldered in the hole in the keeper.

The purpose for this is for the end of the magazine spring to exert pressure against this keeper, pressing it firmly against the bottom plate, with the stud engaging the hole in the bottom plate, thus preventing removal of the bottom plate unless the stud is pushed inward.

The magazine follower can be made from 1/2-inch flat stock, by filing and grinding a proper bevel as shown, and by welding a leg of 12-gauge flat stock at both front and rear to prevent canting and resultant binding.

In most cases, factory-made magazine followers are stamped or drawn to shape. This requires rather complicated, complex shaped dies. So, unless a large number of magazines are to be made, I recommend the welded-up follower shown.

A fairly crude but usable spring can be wound using a mandrel that is made using a 12- by 14-inch length of 3/8- by 1-inch flat stock. Start by grinding both the front and rear edges to a radius, or half round. Drill a .065-inch hole near one end. Then, with one end of a length of .065-inch music wire fastened in the hole, feed the remainder through a groove filed in a 1/2-inch square bar some 10 inches long. A usable spring should result by winding the bar repeatedly around the mandrel. **Note:** I said a *usable* spring. It may not be particularly pretty. Somewhere between 5 and 6 feet of wire will be required to wind such a spring. If music wire or spring stock is not available, you will have to straighten and rewind a screen door spring or similar spring. This will not be easy, but it can be done if nothing else is available.

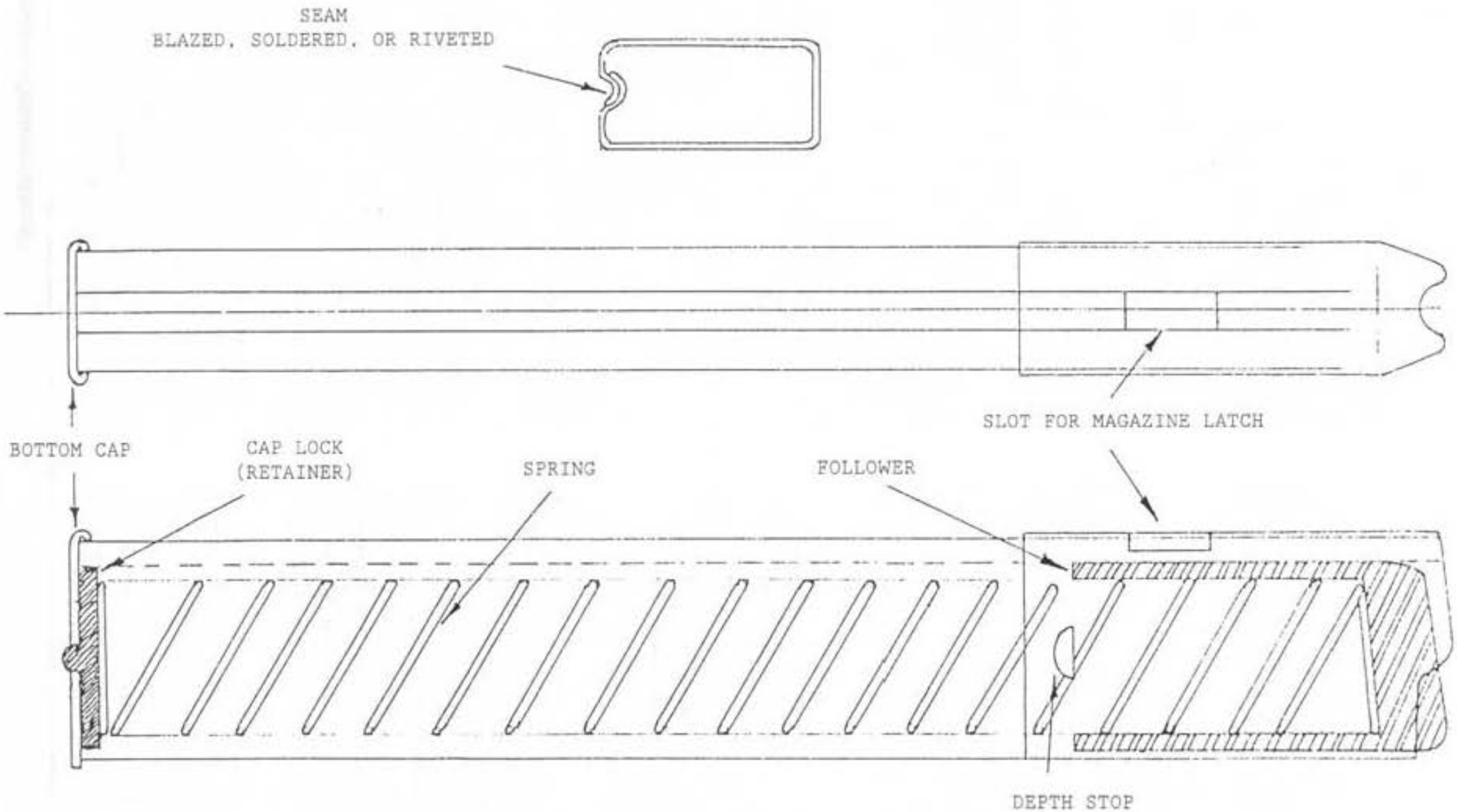
SEAM
BLAZED, SOLDERED, OR RIVETED
SLOT FOR MAGAZINE LATCH
BOTTOM CAP
CAP LOCK
(RETAINER)
SPRING
FOLLOWER
DEPTH STOP

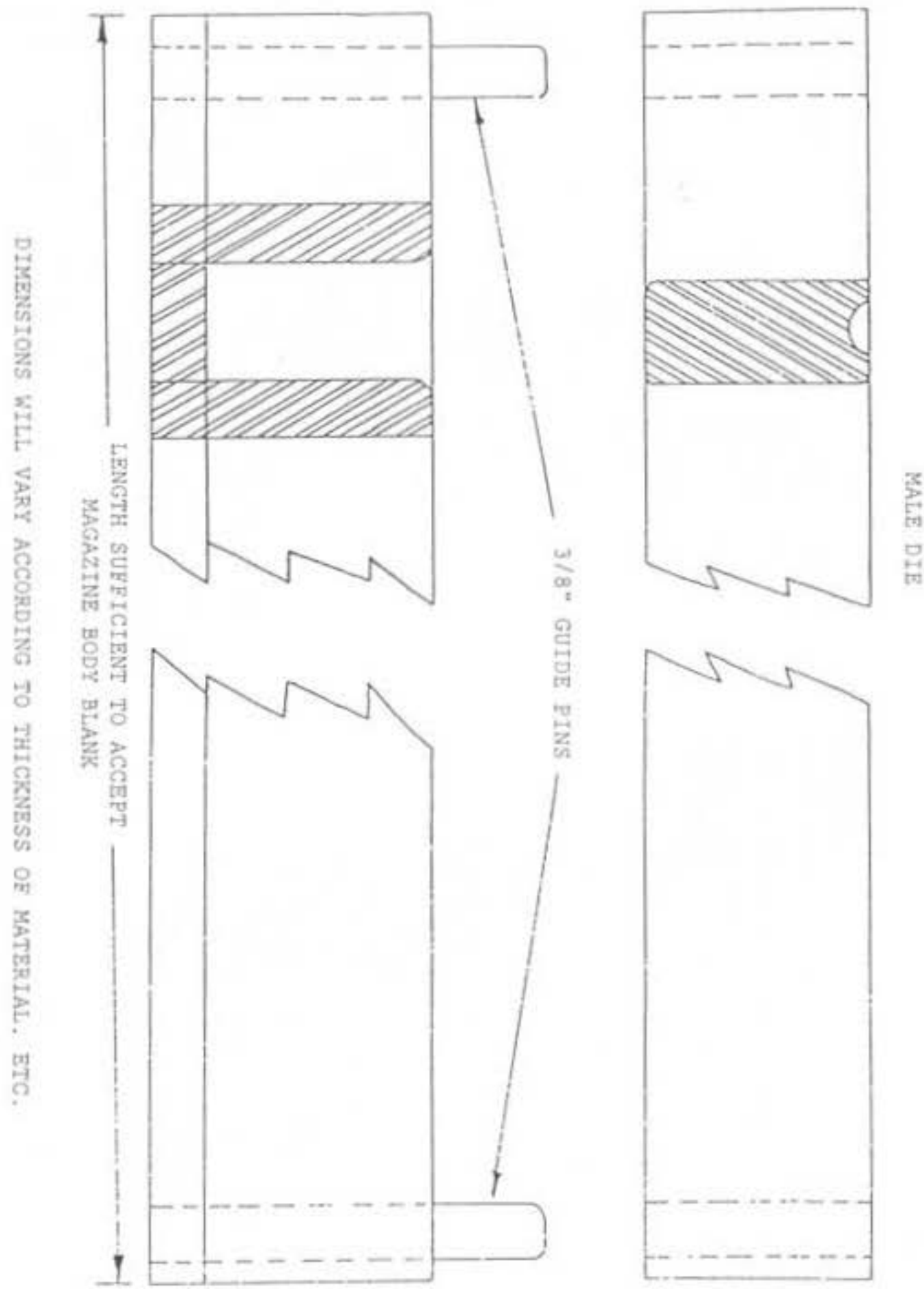

Magazine forming dies.

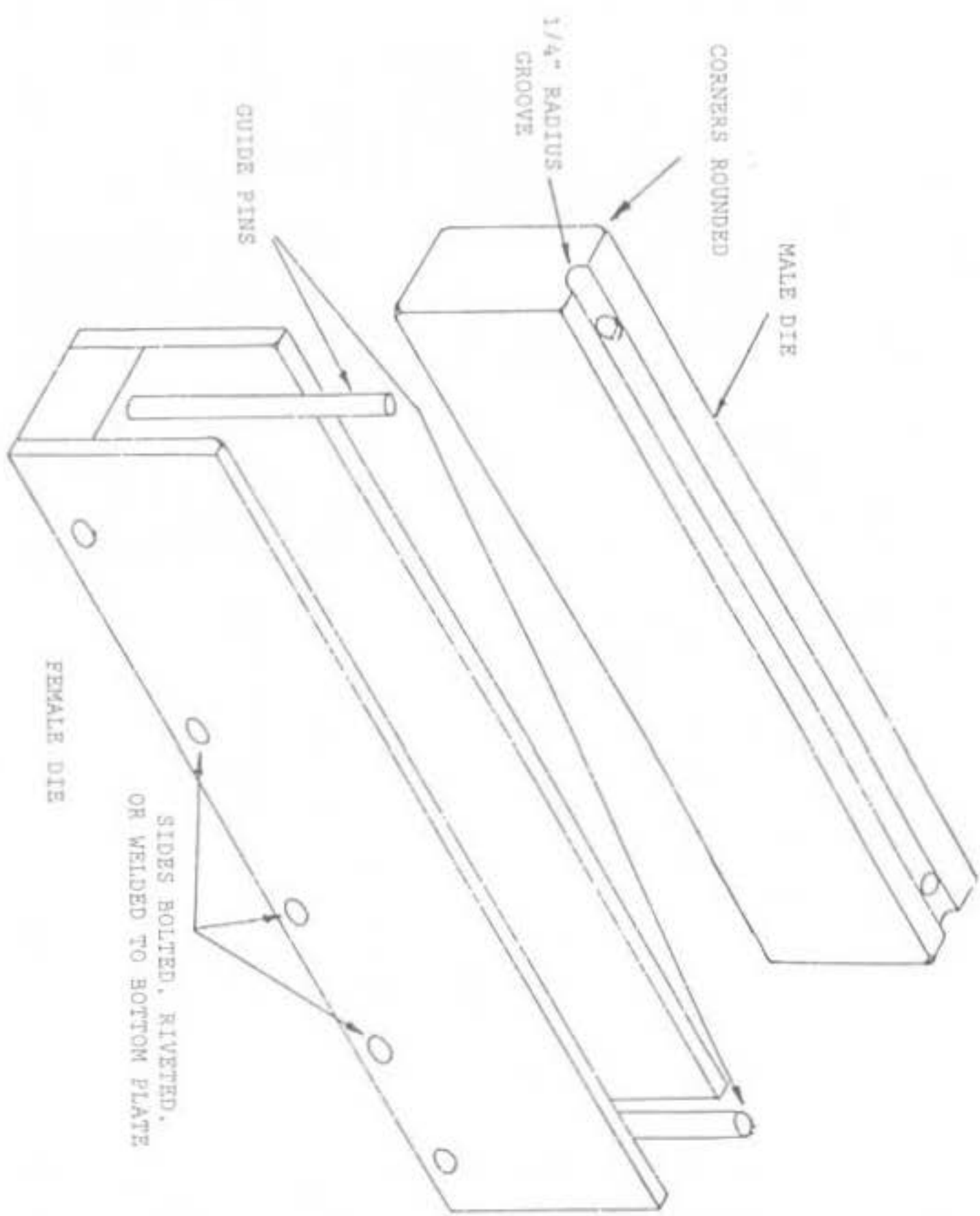

Dies for forming magazine body.

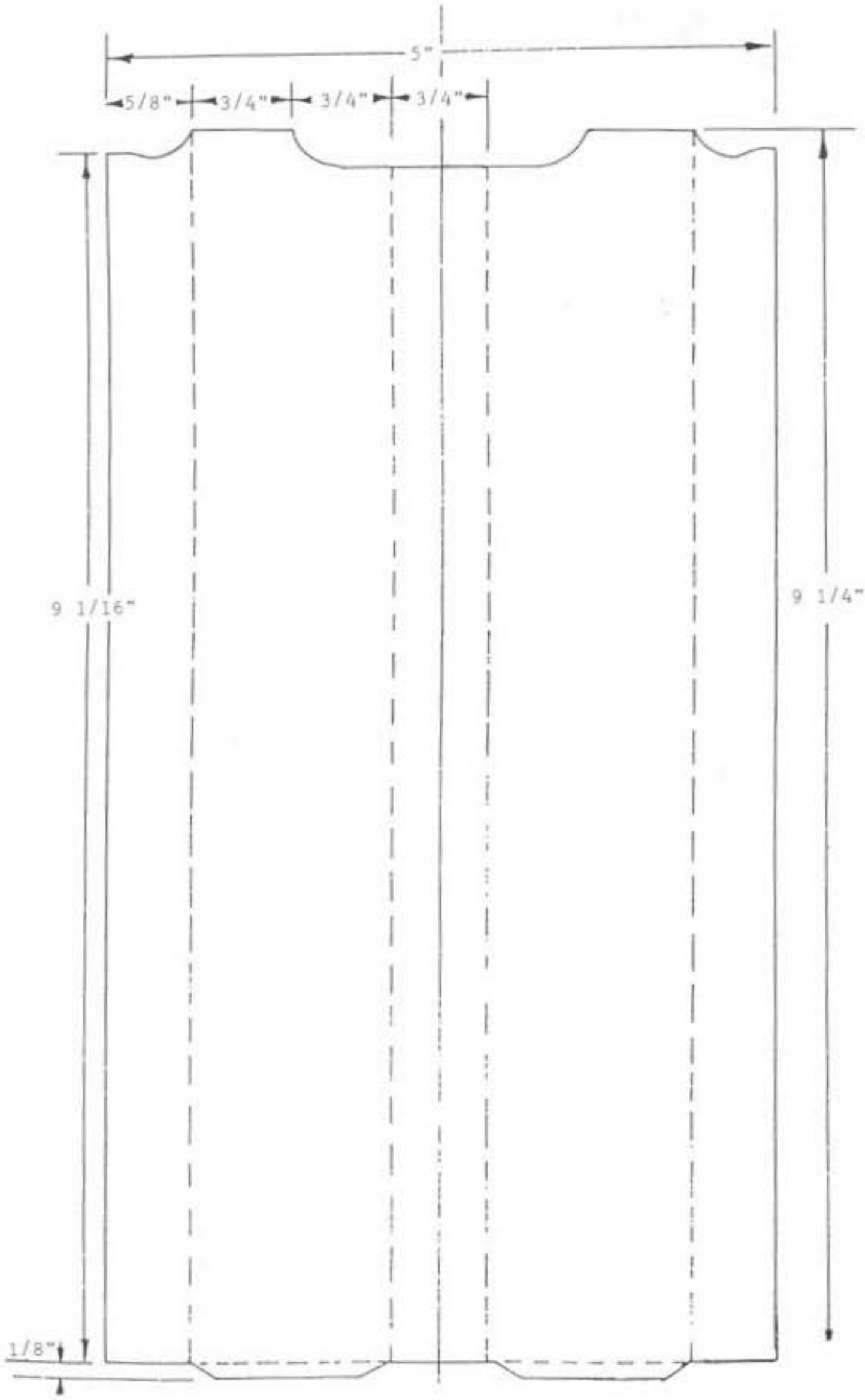

Magazine template.

RETAINER

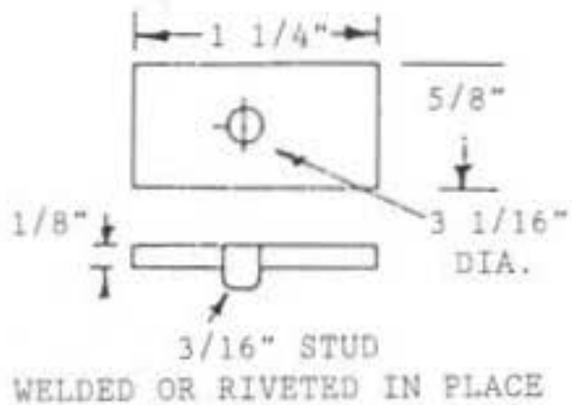

MAGAZINE FOLLOWER

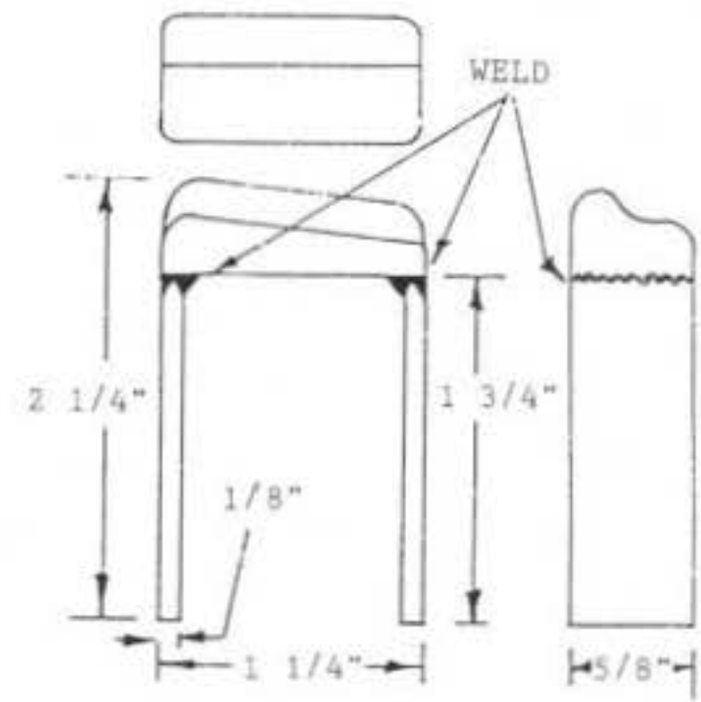

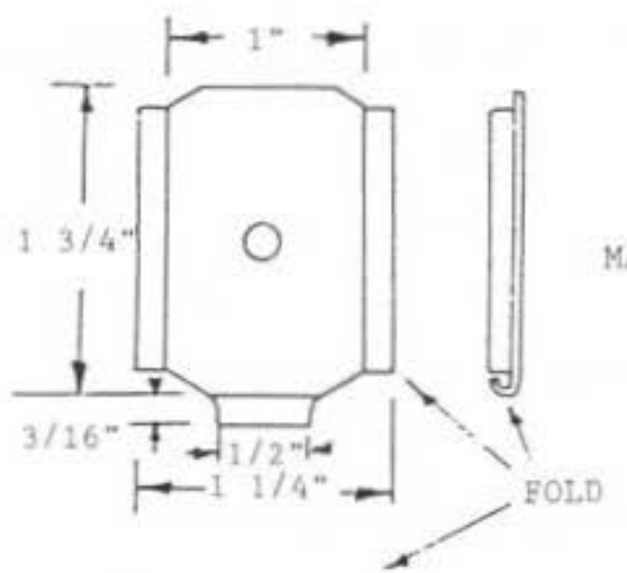

MAGAZINE BOTTOM

CHAPTER

10

Assembly and Adjustment

By now, all of the component parts of your gun should be completed. Before heat-treating the parts and before beginning the final polishing and bluing, you should assemble and test the gun. Whatever additional fitting and adjustment are necessary should be done at this time.

The working parts should all have a smooth finish, free from burrs and scratches. Such flat parts as the hammer, trigger, and sear should have flat, smooth sides, square with the top and bottom and finished to a point where they feel slick when handled.

A good way to achieve such a finish is to place a sheet of abrasive cloth on top of a piece of plate glass and firmly rub the part to be polished back and forth across the mounted abrasive cloth. An extremely fine finish can be obtained in this manner.

With all of the interior parts polished to your satisfaction, begin assembly of the gun by placing the extractor in the slot provided for it in the bolt, together with the spring, and pinning it in place. If the closed-bolt version is used, insert the firing pin and spring into the bolt and pin them in place. Then place the bolt inside the receiver and install the cocking lever. Insert the barrel in the forward end of the receiver where it is held in place by screwing the combination barrel nut/barrel shroud in place. Now place the action spring and guide inside the rear end of the receiver with the forward end of the spring inside the hole in the bolt.

To assemble the trigger group, insert the lower sear, with its return spring in place in the trigger housing, and pin it in place. Install the trigger, with the trigger bar pinned to it, in place and pin it. Attach the trigger return spring to the trigger bar, with the rear end stretched slightly to exert tension and pinned in place at the rear of the trigger housing. The upper sear is then pinned in place.

Use the same procedure for the closed-bolt gun, except that you'll use only a single sear, in the same location as the lower sear. Use a hammer and hammer spring instead of the upper sear. Install the detent and spring in the safety before placing it in its slot just ahead of the trigger.

With the trigger assembly in its location inside the lower receiver, place the upper receiver in position on top of the lower receiver and thread the hinge screw through the mating parts at the front of the receiver. Then put the grip in place and secure it with the stock bolt, or grip screw, which also holds the rear ends of the receivers together.

Next, put the magazine release and spring in place and pin them, thereby completing assembly of the gun.

The closed-bolt gun can be tested for proper feeding by using live ammunition, but the firing pin should be removed as a precaution against accidental firing. The open-bolt gun will require some dummy cartridges since the firing pin is fixed in place.

Dummy cartridges are easily made, simply by seating a bullet in an unprimed case. Preferably, you should use a new case or, at least, a case that is *resized to factory dimensions*. The bullet should be seated to the same depth as a factory-loaded round. Make up several of these in advance.

With some of these dummy rounds inserted in the magazine, insert the magazine in the gun and cycle the action by hand. If the cartridges do not feed properly, try to determine the cause by allowing the bolt to move forward slowly and observing where the bullet nose contacts the approach cone of the barrel. If it hits on the bottom, the forward portion of the magazine lips should be sprung open slightly. This will raise the bullet nose in relation to the magazine body. If the bullet nose rides too high and hits the top of the barrel, or the cartridge stands straight up (stovepipes), then the magazine lips should be sprung inward, a little at a time, until the condition is corrected. Keep in mind that when the bolt strips a cartridge from the magazine during normal firing, the bullet nose will try to move downward due to pressure being exerted against the upper rear of the cartridge case by forward movement of the bolt. So it probably won't take quite as much adjustment to the magazine lips as slow hand-feeding may indicate.

When you are satisfied with the way the gun feeds by hand cycling, you are ready to test-fire the gun. Replace the firing pin if using the closed-bolt version. One round of live ammunition (that's *one*, a single round) should be loaded into the magazine. Then, after cocking the action and while holding the gun well away from your face and body, pull the trigger.

If everything works the way it should, the round will be stripped from the magazine and fired by the forward moving bolt when the trigger is depressed (open bolt). After firing, the breech block should have traveled rearward, ejecting the empty case in the process, far enough for the sear to catch and hold it in the rearward, or cocked, position. In the closed-bolt version, the hammer should fall when the trigger is pulled, firing the round; the bolt should travel to the rear, ejecting the empty case, and return to its closed position.

If it did, congratulations! Now try it with two cartridges, still as a semiautomatic. We will get to the full-automatic functioning soon. But some of the parts should be hardened first to prevent them from being battered or worn out of shape.

If the bolt did not remain open, a little more fitting may be necessary. Try working the action by hand with the trigger depressed just far enough to release the bolt. As the bolt is pulled to the rear, the sear should catch it and hold it open. If it doesn't, you may not have the trigger mechanism made, or fitted, properly. Check it carefully.

If the trigger mechanism is working properly, which it probably is, then either the breech block is too heavy or the recoil spring is too stiff. In either case, the bolt would not travel to the rear far enough for the sear to catch it. Try cutting one coil off the recoil spring and test-fire it again, using only one round as before. If it still doesn't stay open, cut off another coil and try again. Repeat a third time if necessary.

If it still doesn't stay open after cutting off a third coil, something else must be wrong, or you had an extremely stiff recoil spring to begin with. Try polishing the breech block and the inside of

the receiver to reduce friction. If it still doesn't work properly, turn the breech block to a slightly smaller diameter (only 1/16 inch or so), leaving a full diameter band, 1/4 to 1/2 inch wide at each end and in the middle.

Take care not to weaken the spring or lighten the breech block so much that it will recoil far enough to the rear for the cocking lever to strike the rear of its slot. To check for this happening, wrap a layer of tape around the receiver, covering the last half inch of the cocking lever slot. Then fire the gun. If the cocking lever does not tear the tape completely through to the end of the slot, it should be considered satisfactory. If it does, a slightly stronger spring is needed.

When you are satisfied that you have it adjusted and working properly, try firing it with two rounds in the magazine. The trigger must be released and pulled again to fire subsequent shots. Anything else is unacceptable and must be corrected.

Assuming it does work correctly, the gun should now be disassembled and the parts heat-treated as described in the next chapter. After finishing the parts, assemble the gun once again and test it thoroughly both on semiautomatic and full-automatic fire.

When testing as a full automatic, start by loading only two or three rounds in the magazine. This will prevent having a runaway gun if something should break or fail to work properly. It isn't my idea of fun to have a full automatic with a full magazine continue to fire after the trigger is released. At that point, all you can do is hold on to it and hope it runs dry before you hurt anybody. So, test it thoroughly, with only a few rounds in the magazine, before stuffing it full.

Another important point that deserves special mention is the block you welded to the bottom of the receiver for the grip and trigger housing bolt to screw into. Matching threads should continue through the receiver body. The bolt should be long enough to screw in almost flush with the inside of the receiver. Do not neglect this! I once saw a submachine gun upper receiver assembly break loose from the grip and trigger mechanism while the gun was being demonstrated. The receiver and barrel assembly fell to the ground and continued to fire, jumping and kicking in every direction, while the four spectators and the demonstrator scattered to find something to hide behind. Luckily, no one was injured or killed, but they could have been.

The gun described in this book would separate from its ammunition supply if it broke apart as described above. The gun described in *Vol. I* would have continued to fire since the upper receiver would have remained intact with the magazine housing. The above example does not apply to this gun, but it is included as a point of safety.

CHAPTER

11

Heat Treatment

I have gone through a lengthy description concerning heat treatment several times before, in *Vol. I* and in *Home Workshop Prototype Firearms*, to name just a couple. I see no point in repeating it here. What is pertinent here is simply that we obtain a satisfactory degree of hardness and ductility for the component parts of this gun. Therefore, that is what we will concern ourselves with.

The upper and lower receivers, trigger housing, and barrel will not require any sort of heat treatment. These parts should simply be polished as desired, subjected to a suitable finish, and otherwise left alone.

The breech block, or bolt, should be heat-treated to a hardness consistent with a reading of 35 to 38 on the Rockwell "C" scale. This is done not only to prolong wearability, but also to prevent battering and deformation, especially in the bolt face and sear notch areas in the open-bolt version and in the area where the hammer contacts the bolt in the closed-bolt version. This part contains too much mass to heat satisfactorily with a torch; therefore, a furnace should be used. Numerous machine shops in a given area will have furnaces suitable for this, and most will provide this service—even though it may seem like they are charging an exorbitant amount for it. Keep in mind, though, that it takes a considerable amount of electricity or gas to heat such a furnace, which must be paid for.

If you used SAE 4140 steel as I recommended, you should ask the heat treater to heat the part to between 1,525 and 1,625°F and quench it in oil. If then drawn at 900 degrees, it should have a hardness equal to C37 Rockwell, which is adequate. Most automobile axle material can be treated in a similar fashion. However, because we do not know the exact composition of the steel used here, try a small scrap first to determine the correct procedure. If the results are unsatisfactory, adjust the temperatures until you find the correct combination.

The small parts, including the sears, hammer, magazine latch, and trigger bar, should be somewhat harder than the bolt. Again assuming that 4140 was used as material, these parts should be heated to between 1,525 and 1,625°F

and quenched. They are then drawn at 800°F, which gives a hardness reading of C38. These parts, having little bulk, can be heat-treated with a torch if necessary.

In practice, you will need at least a quart of SAE 10 motor oil in a container with a large open top. Also required is an oxy-acetylene welding outfit capable of heating the material quickly. The small parts can be suspended from heavy steel wire, such as that coat hangers are made from, while heating.

The parts can be suspended singly directly over the oil container, using the heavy wire as a handle, and heated through use of an oxy-acetylene torch adjusted to give the hottest flame possible. The material is heated to a bright, clear, glowing red, devoid of any yellowish tinge. This is the "cherry red" so often mentioned in connection with heat-treating activities. It should be held at this heat for a short time to ensure a complete saturation of heat. Then plunge it into the container of oil, which is at room temperature or slightly warmer. It should now be so hard a file won't touch it. If it is not, try a scrap of the same material at a slightly hotter temperature, and when the proper combination is found, apply it to the parts to be hardened.

The hardened part is then polished bright to allow observance of the color and placed on a fairly thick steel plate. The torch flame is then placed on the part and the plate it is resting on. It will begin to change color as it takes on heat, going from pale yellow to yellowish brown to purple to dark blue, which becomes progressively lighter as the temperature increases. When the part reaches a pale blue, the heat should be withdrawn and the part allowed to cool.

Another method that can be used on parts made from low-carbon steel such as 1018, or similar, involves the use of surface-hardening compounds such as Kasenit, Hard-N-Tuff, and others that are sold by gunsmith supply houses as well as welding supply stores. These compounds, when used as directed, impart a hard surface to the part so treated while retaining a soft core. The instructions that accompany all of these should be followed closely since use of each individual brand may differ slightly.

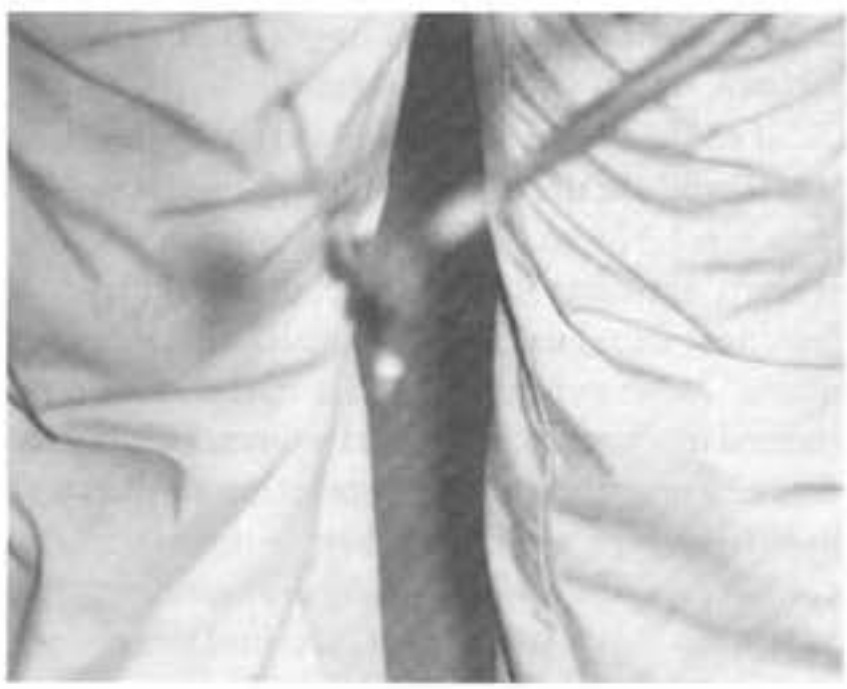

Small parts can be heat-treated using a torch.

As part approaches quenching color, move it closer to quenching bath.

When the desired temperature is reached, as determined by color, drop the part into an oil bath.

The hardened part as removed from quenching bath.

After quenching, polish the part to a bright shine and heat to desired tempering color. Place it on a heavy plate, as shown, while heating to ensure an even temperature.

Low-carbon steel can be hardened using compounds such as Kasenit, as shown. Several other similar compounds are also available.

CHAPTER

12

Finishing and Bluing

Now that our component parts are all finished, tested, and heat-treated, all that remains is to finish them, using some process that will be both decorative and protective.

The biggest problem here is that bluing setups are expensive. Because most of my own equipment used for the purpose is several years old, I did not realize just how expensive until I began checking the prices of various chemicals and prepared bluing solutions when I began to write this chapter. I came to the conclusion that if a person intends to finish only the one gun, it would be far more economical to have it done by a gun shop offering this service.

In my other books I have described several different methods of finishing. It was my original intent to detail a method for imparting a "French gray" finish that will also impart several others, including blue, by varying the time the parts are left in the solution. I described this briefly in *Homemade Prototype Firearms*. However, a call to my local druggist disclosed that the cost of the chemicals involved would be almost $100. I immediately put that idea aside.

There are numerous "instant cold blues" on the market that may seem attractive at first glance. However, I have never found one that would stay put. They fade or turn some other color within a short time, requiring a repetition of the process. In fact, I had a friend several years ago who spent his spare time remodeling military rifles into what he described as "custom" rifles, which he then tried to sell or trade. He was too cheap to set up a proper bluing operation or to pay anyone else to blue them for him. His guns were finished by swabbing on several coats of a well-known cold blue. This resulted in a fairly attractive finish. Immediately upon completion, he would attempt to sell or trade the gun. If he couldn't get rid of it in a couple of days, he had it all to do over again. Some of his guns required refinishing a dozen times or more before he managed to peddle them. At least he acquired experience.

Regardless of the method used, a permanent process is going to require at least one tank and a method to heat it. Fifty years ago several sources

of advice or information advocated obtaining rocker arm covers from the "straight eight" engines that were standard installations in several of the higher-priced automobiles of the day. These were usually available at salvage yards (we called them junkyards back then) for 50 cents or so. After the various mounting bolt and vent holes were welded up, these did indeed make usable bluing tanks.

Today, this is no longer valid. Modern short-block engines have covers too short for the purpose, and many are made from unsuitable material. Most sheet-metal shops will make up tanks suitable for the purpose at a fairly reasonable price. These tanks must be long enough to contain the longest barrel and receiver that you expect to process and should be at least 6 inches wide and 6 inches deep. If only guns such as the one described here will be processed, the tanks can be no more than 12 inches long. You may eventually want to make up an M16/AR-15 conversion unit that will appear in a forthcoming book of mine, so go ahead and get them 20 inches long. This will enable you to process this one too. The seams must be welded, not brazed or soldered, since the solution will simply dissolve any lead solder it comes into contact with for more than a few minutes. Also avoid brass or copper because its presence will prevent the solution from working. When in contact with bluing salts, both stainless-steel tanks and gun steel can cause a galvanic battery-type current flow that can cause various types of color streaking and spots along with the blue. Therefore, the bluing tank proper should be constructed from black iron.

Burners must be made to heat at least two tanks. These can be made from 1-inch-diameter pipe that is long enough to heat the entire length of the tank. Drill two rows of holes, 1/8 inch in diameter and spaced 1 inch apart with approximately 1 inch between the rows. Cap one end of the pipe, and braze or weld a mixing valve to the open end. Valves suitable for this can be salvaged from discarded gas stoves and heaters.

Make a 3- to 4-foot-high rack from angle iron to support the burners, with a cross piece welded across each end some 4 inches below the tanks to support the burners. Though it is possible to use an ordinary deep fat thermometer to check the temperature of the solution, a thermometer from one of the gunsmith supply houses will last considerably longer.

If desired, all this equipment can be purchased already built and ready to use from several suppliers. Ken Jantz Supply Company of Davis, Oklahoma, can furnish everything you need, including polishing compounds, wheels, abrasive cloth, tanks, burners, bluing salts, and degreasing solutions, as well as just about anything else you might have a use for.

Several different formulas exist for mixing bluing salts. One that can be considered fairly foolproof (I can attest to this since I have used it for years) is as follows:

2 parts lye (sodium hydroxide)
1 part ammonium nitrate
2 parts water

The ammonium nitrate is sold as fertilizer at feed and seed stores. Lye can be purchased in grocery stores, chemical supply houses, and sometimes radiator repair shops, where it is used to clean radiators.

The solution should be mixed either outdoors or in a room with plenty of ventilation because a considerable amount of ammonia gas is generated while mixing. After mixing, add a couple of ounces of tri-sodium phosphate. Though not absolutely necessary, this is often done to accelerate the bluing process.

After the initial mixing, allow the solution to boil for at least 30 minutes before using. The temperature should then be adjusted to between 240 and 260°F by either adding a small amount of water if it is too hot or allowing more to boil away if it is not hot enough. Then immerse the parts to be blued in the solution. It is a good idea to sus-

pend them in the solution using wires or metal rods so that none come in contact with the bottom of the tank.

Allow more water to boil away until the temperature reaches 290 to 295°F. After some 20 minutes at this temperature, the parts should be removed and rinsed in cold water. If the color is satisfactory, the parts should be boiled either in clean water or water that has a very small amount (2 or 3 ounces per 5 gallons of water) of chromic acid. This is done in an attempt to remove all traces of the bluing solution. If any salts remain trapped in cracks or crevices, they will eventually expand or "bloom" out, especially in damp weather, and form a white powdery scale.

The parts are then dried and oiled, after which they should be hung up and left alone for at least 24 hours before assembling. This is because the blued surfaces tend to harden after about a day and will resist scratching and blemishing far more than when they were first removed from the tank.

Although this solution will last indefinitely, it will be necessary to add a small amount of lye occasionally. It also helps to add a small amount of water each time after shutting off the fire under the tank and allowing the solution to cool.

Parts made from certain types of steel will sometimes turn red, bronze, purple, or chocolate brown. Usually these parts can be made to take on the same color as the rest of the gun by repolishing them bright and placing them in the bluing tank before it reaches operating temperature. The parts should be left in the solution until enough water boils away for the temperature to rise to 310 to 320°F.

The color produced by this solution is almost jet black with a gloss or sheen in direct proportion to the amount and type of polishing done. If a color that is more of an actual blue is desired, sodium nitrate can be used in place of the ammonium nitrate. However, this solution is far more temperamental than the first and will not wear nearly as well.

I might mention one more time the fact that these solutions will simply devour aluminum, as well as lead and soft solders. Therefore, parts containing any of the above must be kept out of the tank, or it is likely you will never see them again.

Eyes and bare skin must be protected from these hot solutions. Add water slowly by using a long-handled dipper or by allowing it to run through a length of pipe so that you are out of reach of any drops that spatter or pop out. Remember, these hot solutions are dangerous when handled carelessly.

One of the two guns pictured in this book was bead-blasted after polishing and colored using the above solution. This resulted in a rather dull flat black finish that, combined with the black grip, gave it more of a "military" look. The other was finished as described in my book on .22 machine pistols, combining a high-gloss finish on the upper receiver and small parts with a case-colored lower receiver. This, combined with a highly finished figured grip of English walnut, made a far more attractive gun than the first.